Jomar® VALVE

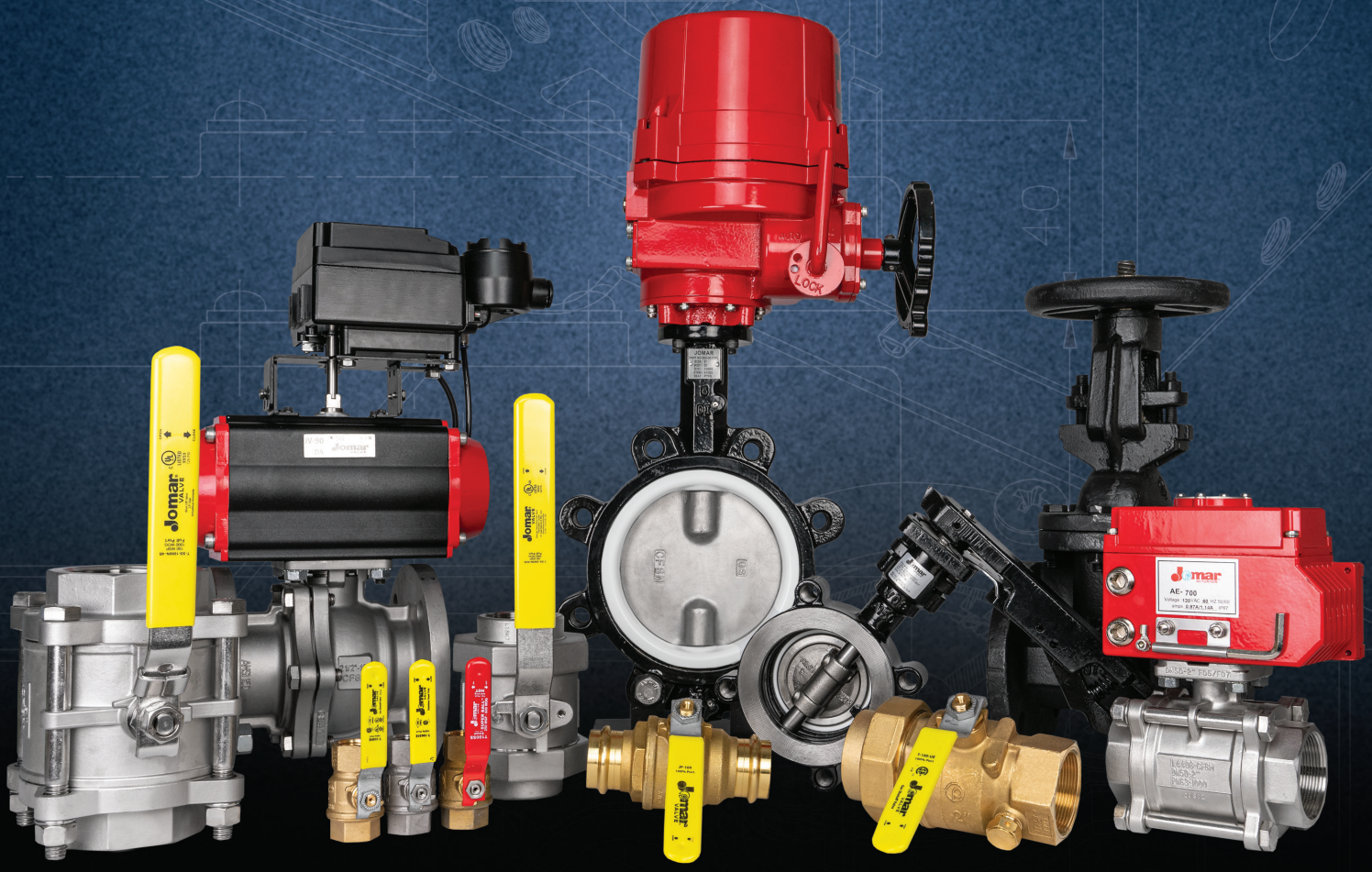

INDUSTRIAL & ACTUATION CATALOG

INDUSTRIAL & ACTUATION CATALOG

7243 MILLER DRIVE
WARREN, MI 48092

586.268.1220
CSR@JOMAR.COM

JOMARVALVE.COM

LINKEDIN.COM/COMPANY/
JOMARVALVE

@JOMAR_VALVE

YOUTUBE.COM/
@JOMARVALVE

LIT-JV-IAC • 11122025

INNOVATIVE VALVE SOLUTIONS SINCE 1966

Founded by former Navy Commander Joseph Martin in 1966, and headquartered in Warren, MI, Jomar Valve is a recognized leader in the valve industry, offering innovative solutions for plumbing, HVAC, natural gas, industrial, and actuation applications. Our products carry the most certifications of any valve on the market, and we are committed to continuous growth and improvement.

At Jomar, we are proud to say our company culture is built around our customers' needs. Our dedicated team of professionals, with decades of industry experience, hold a wealth of knowledge and provide customized care and technical solutions every day.

Our production capabilities and strategically placed stocking warehouses across North America enable us to provide industry-leading lead times, fill rates, and local delivery for thousands of SKUs.

Investments in technology, software, and resources - including an e-commerce portal, and hundreds of downloadable BIM and CAD files for our engineering specifications community - make partnering with Jomar convenient.

Today, Jomar Valve is under the ownership of Fratelli Pettinaroli, a third-generation, family-operated ISO 9001 Italian manufacturer with a global presence spanning across more than 60 countries.

United by a shared passion to develop dynamic, high-quality valve solutions to meet the demands of any project, and an unwavering commitment to innovation and excellence, Pettinaroli and Jomar Valve continue to blaze forward together, redefining and elevating the standards of quality products and superior customer care.

JOMAR VALVE HEADQUARTERS, WARREN, MI

PETTINAROLI HEADQUARTERS, NORTHERN ITALY

TABLE OF CONTENTS

BRONZE BALL VALVES

T-200CSS 6
S-200CSS 6

BRASS BALL VALVES

T-100NE 7
T-100SSE 7
T-100SSS 8
T-100FMN 8
T-100UE 9
T-100STN 9
JP-100 10
JP-100 XLC 10
T-82-M 11
T-84-M 11
T-83C 12
PF-86-M 12
PF-86-PF 13
JF-100T 13
JF-100S 14
JF-100TFM 14
JF-100TS 15
Lead Free Add-a-Valve® 15

CARBON STEEL BALL VALVES

T-CS-1001N-SS 16
T-CS-2000N-SS 16
T-CS-1000N-SS-4B 17
S-CS-1000N-SS-4B 17
T-CS-2001N-SS-4B 18
S-CS-2001N-SS-4B 18
T-CS-2002N-SS-DUE 19
S-CS-2002N-SS-DUE 19
FL-CS-100-150 20
FL-CS-100-300 20

STAINLESS STEEL BALL VALVES

T-SS-1001N 21
T-SS-2000N 21
T-SS-2000N-FP 22
T-SS-2000N-MF 22
T-SS-2000N-DH 23
T-SS-1050N-3L 24
T-SS-900N 24
T-SS-1000N-4B 25
TS-SS-1000N-4B 25
S-SS-1000N-4B 26
T-SS-2001N-4B 26
S-SS-2001N-4B 27
T-SS-2002N-DUE 27
S-SS-2002N-DUE 28
T-SS-1000 28
FL-SS-100-150 29
FL-SS-100-300 29

RESILIENT SEATED BUTTERFLY VALVES

BFV - Lug 30
BFV - Wafer 31
BFV Lever Handle 32
BFV Gear Operator 32

HIGH PERFORMANCE BUTTERFLY VALVES

HPBFV CS/SS Class 150 33
HPBFV CS/SS Class 300 34
HPBFV Lever Handle 35
HPBFV Lever Handle SS 35
HPBFV Gear Operator 35

GATE VALVES

T-301 36
F-351 36
F-361 37

CHECK VALVES

T-521G 38
T-511 38
T-501 39
T-550 39
F-571 40
F-591 40
F-592 41

STRAINERS

T-100FBG 42
F-651 42

ELECTRIC ACTUATORS

AE Series 43-44

PNEUMATIC ACTUATORS

JV Series 45

DIRECT MOUNT BALL VALVES

T-100 Direct Mount 46
A101 46
A101-DH 47
A-751T/L 47
A1000 48
A1001 48
A2020D 49
A-850T/L 50
A-766T/L 51

ACTUATION ACCESSORIES

ASV 52
ASM 52
AEP 52

DIELECTRIC UNIONS

Lead Free Brass FIP x Galvanized Steel FIP 53
Galvanized Steel FIP x Galvanized Steel FIP 53
Black Iron Steel FIP x Black Iron Steel FIP 54

THREAD SEALANT

Comparison Chart 55

TOPWORKS

1001N 56
2000N 56
1000N-4B 57
2001N-4B 57
2002N-DUE 58
FL-CS/SS-150 59
FL-CS/SS-300 59

ACTUATION RESOURCES

Actuation Technical Tables 60-61
Valve Technical Tables 62
ISO Mount Patterns 63
Actuation Questionnaire 64

VISIT OUR WEBSITE TO LEARN MORE

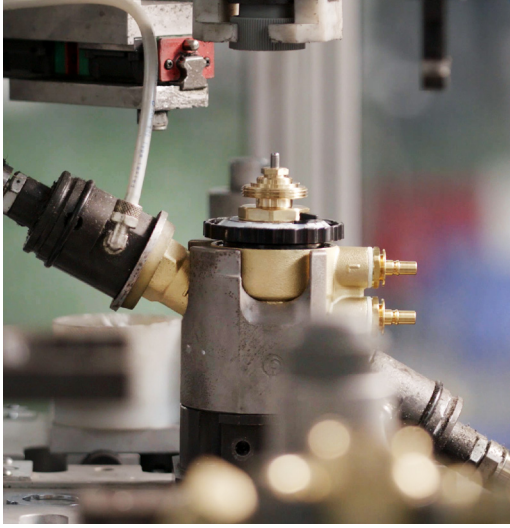

T-200CSS

2 PIECE • FULL PORT • THREADED CONNECTION • STAINLESS STEEL TRIM • 600 CWP

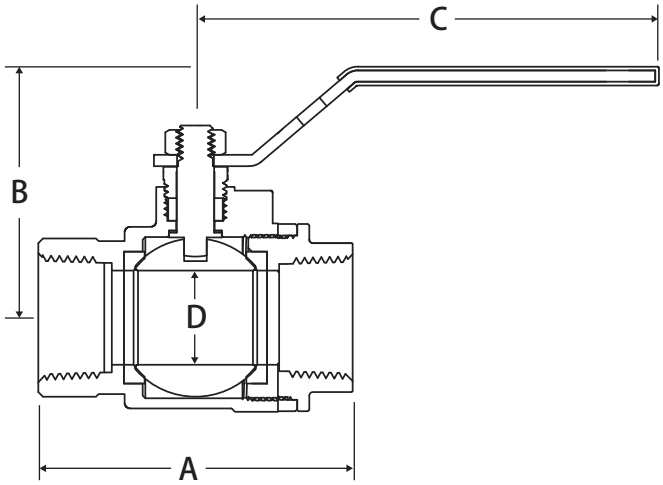

- Dezincification resistant C84400 standard bronze
- Blow-out proof stem
- Heavy commercial pattern
- 100% leak tested
- 29 in-Hg vacuum rating
- Available in C89836 lead free bronze

VALVE SEAT RATINGS

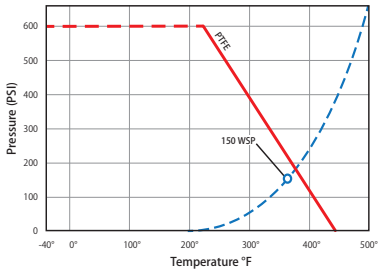

PART NUMBER	SIZE	A	B	C	D
200-701	1/4”	1.97	1.87	3.97	0.37
200-702	3/8”	1.97	1.87	3.97	0.37
200-703	1/2”	2.43	2.01	3.97	0.50
200-704	3/4”	2.79	2.46	4.78	0.75
200-705	1”	3.28	2.62	4.78	0.98
200-706	1-1/4”	3.68	2.79	7.04	1.24
200-707	1-1/2”	4.08	4.10	7.04	1.50
200-708	2”	4.59	4.41	7.04	1.97

S-200CSS

2 PIECE • FULL PORT • SOLDER CONNECTION • STAINLESS STEEL TRIM • 600 CWP

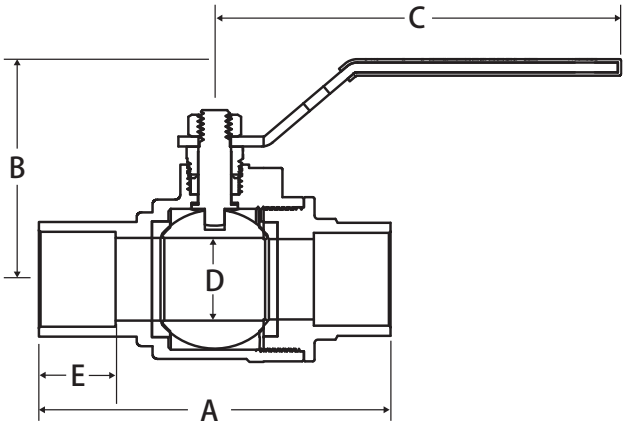

- Dezincification resistant C84400 standard bronze
- Blow-out proof stem
- Heavy commercial pattern
- 100% leak tested
- 29 in-Hg vacuum rating
- Available in C89836 lead free bronze

VALVE SEAT RATINGS

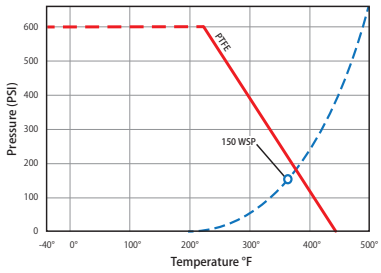

PART NUMBER	SIZE	A	B	C	D	E
200-803	1/2”	2.59	2.01	3.97	0.50	0.50
200-804	3/4”	3.36	2.46	4.78	0.75	0.75
200-805	1”	4.19	2.62	4.78	0.98	0.91
200-806	1-1/4”	4.46	2.79	7.04	1.24	0.97
200-807	1-1/2”	4.97	4.10	7.04	1.50	1.09
200-808	2”	6.02	4.40	7.04	1.97	1.34

© 2025 JOMAR VALVE | P: 586.268.1220 | F: 586.979.8615 | JOMARVALVE.COM

T-100NE

2 PIECE • FULL PORT • THREADED CONNECTION • 600 WOG

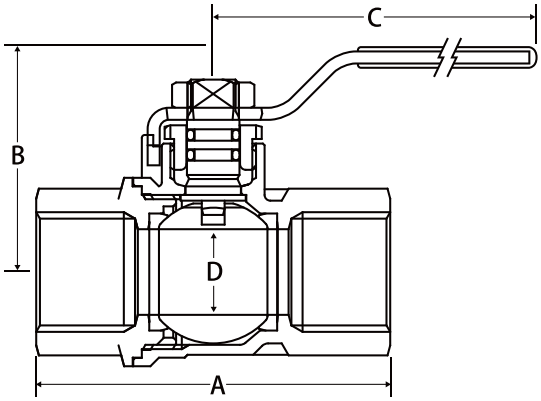

- Blow-out proof stem
- Triple sealing stem with 2 FKM O-Rings and 2nd Generation PTFE seal
- 100% leak tested
- 100% Made in Italy
- Leakproof stem - Lifetime Warranty
- 29 in-Hg vacuum rating
- Accessories available

VALVE SEAT RATINGS

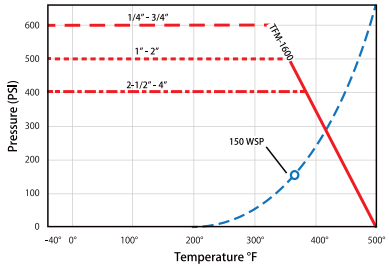

PART NUMBER	SIZE	A	B	C	D	CV
100-701	1/4"	1.86	1.41	2.95	0.39	7.66
100-702	3/8"	1.86	1.41	2.95	0.39	7.77
100-703	1/2"	2.45	1.53	2.95	0.59	16.82
100-704	3/4"	2.71	1.95	3.74	0.79	34.80
100-705	1"	3.30	2.40	4.75	0.97	52.20
100-706	1-1/4"	3.80	2.59	4.75	1.23	112.52
100-707	1-1/2"	4.16	3.22	6.00	1.49	174.00
100-708	2"	5.00	3.40	6.00	1.99	255.20
100-709	2-1/2"	6.06	4.60	8.00	2.46	350.32
100-710	3"	7.08	4.90	8.00	2.99	563.76
100-711	4"	8.57	5.90	9.88	4.00	879.28

T-100SSE

2 PIECE • FULL PORT • THREADED CONNECTION • STAINLESS STEEL TRIM • 600 WOG

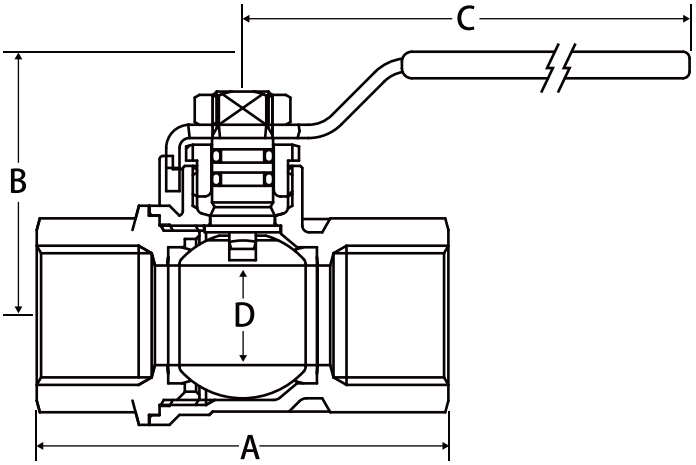

- T.E.A. Ternary Eco Alloy® coated body to prevent dezincification and galvanic corrosion
- Triple sealing stem with 2 FKM O-Rings and 2nd Generation PTFE seal
- Blow-out proof stem
- 100% leak tested
- 100% Made in Italy
- Leakproof stem - Lifetime Warranty
- 29 in-Hg vacuum rating
- Accessories available

VALVE SEAT RATINGS

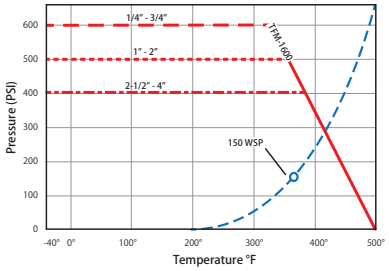

PART NUMBER	SIZE	A	B	C	D	CV
100-501	1/4"	1.86	1.41	2.95	0.39	7.66
100-502	3/8"	1.86	1.41	2.95	0.39	7.77
100-503	1/2"	2.45	1.53	2.95	0.59	16.82
100-504	3/4"	2.71	1.95	3.74	0.79	34.80
100-505	1"	3.30	2.40	4.75	0.97	52.20
100-506	1-1/4"	3.80	2.59	4.75	1.23	112.52
100-507	1-1/2"	4.16	3.22	6.00	1.49	174.00
100-508	2"	5.00	3.40	6.00	1.99	255.20
100-509	2-1/2"	6.06	4.60	8.00	2.46	350.32
100-510	3"	7.08	4.90	8.00	2.99	563.76

T-100SSS

2 PIECE • FULL PORT • THREADED CONNECTION • 600 WOG • STEAM TRIM

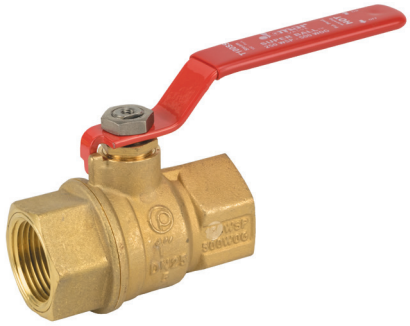

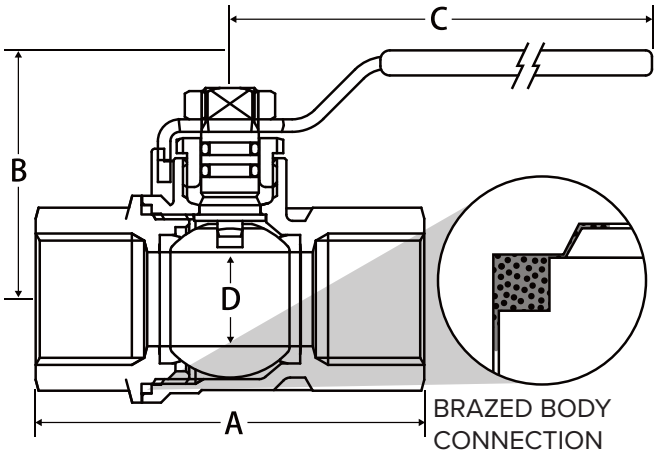

- Blow-out proof stem
- Triple sealing stem with FKM O-Rings and graphite seal
- 250 WSP rating
- 100% leak tested
- 100% Made in Italy
- Special high temperature resistant handle
- Leakproof stem - Lifetime Warranty
- 29 in-Hg vacuum rating
- Accessories available

VALVE SEAT RATINGS

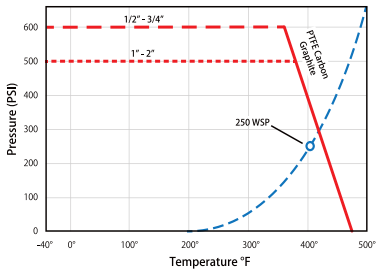

PART NUMBER	SIZE	A	B	C	D	CV
100-533	1/2"	2.45	1.53	2.95	0.59	16.82
100-534	3/4"	2.71	1.95	3.74	0.79	34.80
100-535	1"	3.30	2.40	4.75	0.97	52.20
100-536	1-1/4"	3.80	2.59	4.75	1.23	112.52
100-537	1-1/2"	4.16	3.22	6.00	1.49	174.00
100-538	2"	5.00	3.40	6.00	1.99	255.20

T-100FMN

2 PIECE • FULL PORT • MIP X FIP CONNECTION • 600 WOG

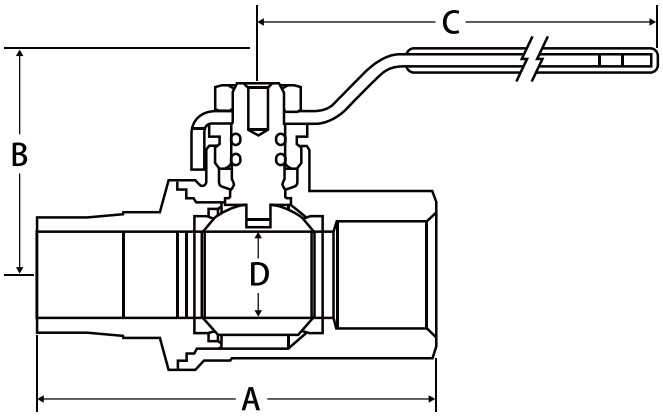

- Blow-out proof stem
- Triple sealing stem with 2 FKM O-Rings and 2nd Generation PTFE seal
- 100% leak tested
- 100% Made in Italy
- Leakproof stem - Lifetime Warranty
- 29 in-Hg vacuum rating
- Accessories available

VALVE SEAT RATINGS

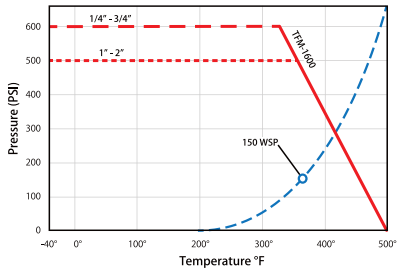

PART NUMBER	SIZE	A	B	C	D	CV
100-601	1/4"	2.29	1.41	2.95	0.39	7.66
100-602	3/8"	2.26	1.41	2.95	0.39	7.77
100-603	1/2"	2.75	1.53	2.95	0.59	16.82
100-604	3/4"	3.10	1.95	3.74	0.79	34.80
100-605	1"	3.68	2.40	4.75	0.97	52.20

© 2025 JOMAR VALVE | P: 586.268.1220 | F: 586.979.8615 | JOMARVALVE.COM

T-100UE

2 PIECE • FULL PORT • SINGLE UNION END • THREADED CONNECTION • 600 WOG • SIDE TAP

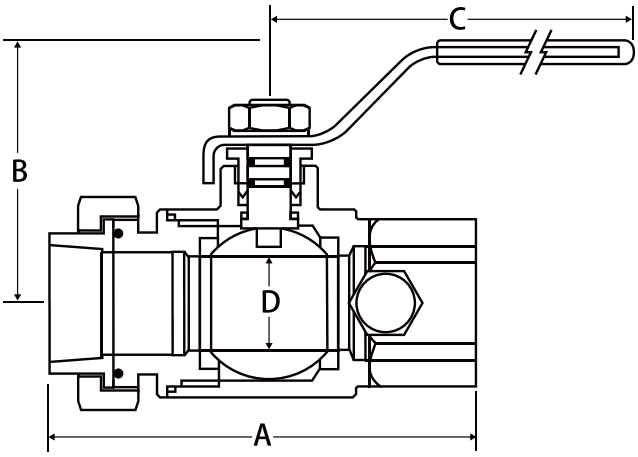

- Triple sealing stem with 2 FKM O-Rings and 2nd Generation PTFE seal
- Blow-out proof stem
- 100% leak tested
- 100% Made in Italy
- FIP x union FIP
- 3/8” - 1/2” have 1/8” FIP side tap
- 3/4” - 2” have 1/4” FIP side tap
- Leakproof stem - Lifetime Warranty
- 29 in-Hg vacuum rating
- Accessories available

VALVE SEAT RATINGS

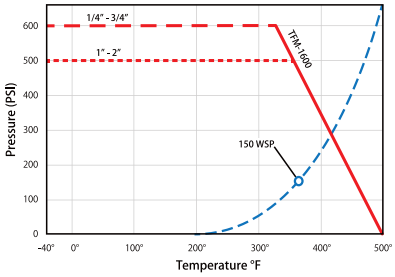

PART NUMBER	SIZE	A	B	C	D	CV
160-102	3/8"	2.93	1.41	2.95	0.39	7.77
160-103	1/2"	3.17	1.53	2.95	0.59	16.82
160-104	3/4"	3.52	1.88	3.74	0.79	34.80
160-105	1"	4.19	2.36	4.75	0.97	52.20
160-106	1-1/4"	5.01	2.59	4.75	1.23	112.52
160-107	1-1/2"	5.57	3.22	6.00	1.49	174.00
160-108	2"	6.31	3.50	6.00	1.99	255.20

T-100STN

2 PIECE • FULL PORT • THREADED CONNECTION • 600 WOG • SIDE TAP

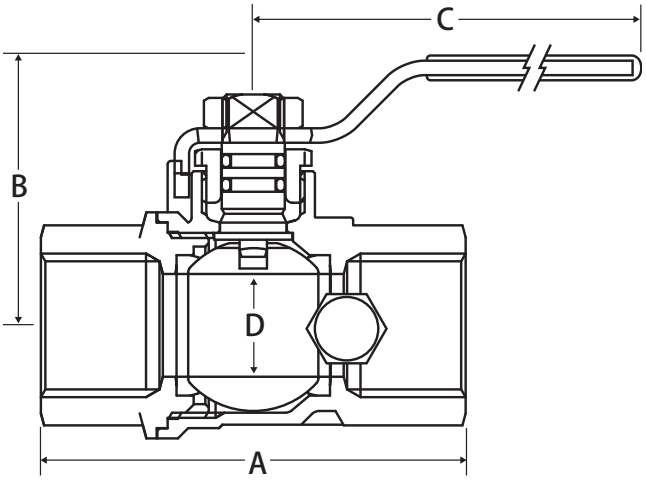

- Triple sealing stem with 2 FKM O-Rings and 2nd Generation PTFE seal
- Blow-out proof stem
- 100% leak tested
- 100% Made in Italy
- 3/8” - 1/2” have 1/8” FIP side tap
- 3/4” - 2” have 1/4” FIP side tap
- Leakproof stem - Lifetime Warranty
- 29 in-Hg vacuum rating
- Accessories available

VALVE SEAT RATINGS

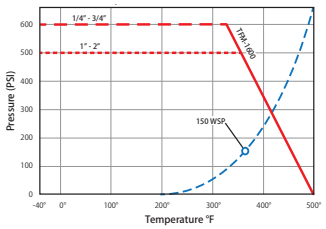

PART NUMBER	SIZE	A	B	C	D	CV
170-102	3/8"	2.02	1.41	2.95	0.39	7.77
170-103	1/2"	2.48	1.53	2.95	0.59	16.82
170-104	3/4"	2.76	1.95	3.74	0.79	34.80
170-105	1"	2.81	2.40	4.75	0.97	52.20
170-106	1-1/4"	4.03	2.59	4.75	1.23	112.52
170-107	1-1/2"	4.72	3.22	6.00	1.49	174.00
170-108	2"	5.23	3.40	6.00	1.99	255.20

JP-100

2 PIECE • FULL PORT • PRESS CONNECTION • 250 WOG

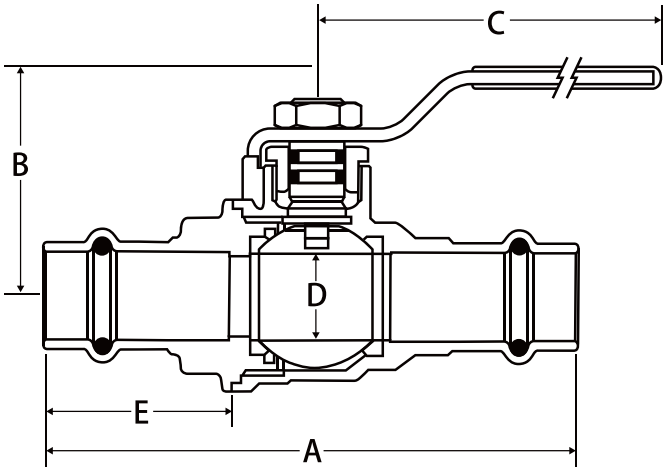

- Blow-out proof stem
- Triple sealing stem with 2 FKM O-Rings and 2nd Generation PTFE seal
- Corrosion resistant brass
- 100% leak tested
- 100% Made in Italy
- Leakproof stem - Lifetime Warranty
- Accessories available

PART NUMBER	SIZE	A	B	C	D	E	CV
100-203	1/2"	3.54	1.53	2.95	0.59	1.24	16.82
100-204	3/4"	3.84	1.95	3.74	0.79	1.28	34.80
100-205	1"	4.31	2.40	4.75	0.97	1.38	52.20
100-206	1-1/4"	4.80	2.59	4.75	1.23	1.30	112.52
100-207	1-1/2"	5.61	3.22	6.00	1.49	1.50	174.00
100-208	2"	7.16	3.40	6.00	1.99	2.01	255.20

JP-100XLC

2 PIECE • FULL PORT • PRESS XLC CONNECTION • 200 WOG

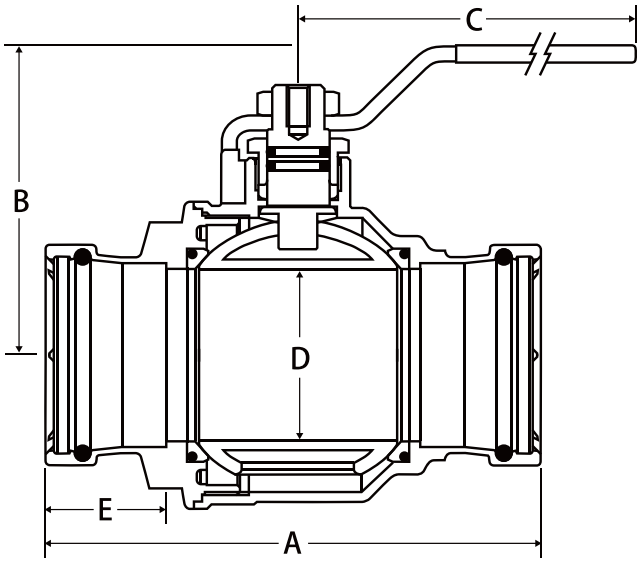

- Blow-out proof stem
- Triple sealing stem with 2 FKM O-Rings and 2nd Generation PTFE seal
- Corrosion resistant brass
- 100% leak tested
- 100% Made in Italy
- Leakproof stem - Lifetime Warranty
- Accessories available

PART NUMBER	SIZE	A	B	C	D	E	CV
100-209XLC	2-1/2"	7.13	4.72	8.00	2.46	1.75	350.32
100-210XLC	3"	8.49	5.31	8.00	2.99	1.92	563.76
100-211XLC	4"	10.79	5.90	9.88	4.00	2.22	879.28

© 2025 JOMAR VALVE | P: 586.268.1220 | F: 586.979.8615 | JOMARVALVE.COM

T-82-M

2 PIECE • FULL PORT• MINI VALVES • THREADED CONNECTION • 600 WOG

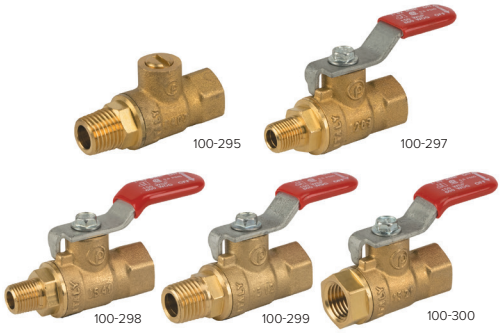

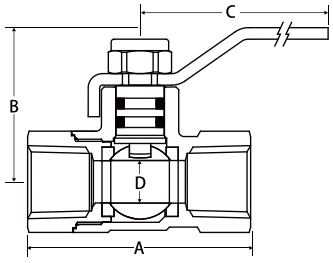

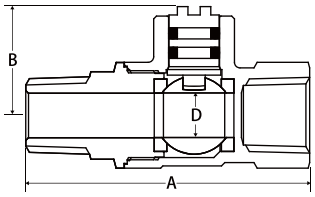

- Greater flow rate
- Blow-out proof stem
- 2 FKM O-Rings
- Large raised wrench flats
- 100% leak tested
- Made in Italy
- Leakproof stem - Lifetime Warranty

VALVE SEAT RATINGS

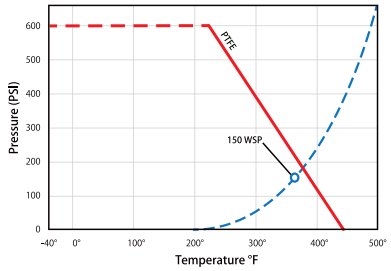

PART NUMBER	SIZE	A	B	C	D
MINI SCREWDRIVER SLOT HANDLE					
100-295	1/4" FIP x 1/4" MIP	2.01	0.77	-	0.31
LEVER HANDLE					
100-297	1/8" FIP x 1/8" MIP	1.96	1.14	1.69	0.31
100-298	1/4" FIP x 1/8" MIP	1.96	1.14	1.69	0.31
100-299	1/4" FIP x 1/4" MIP	2.01	1.14	1.69	0.31
100-300	1/4" FIP x 1/4" FIP	1.65	1.14	1.69	0.31

T-84-M

1 PIECE • STANDARD PORT • MINI VALVES • THREADED CONNECTION • 450 WOG

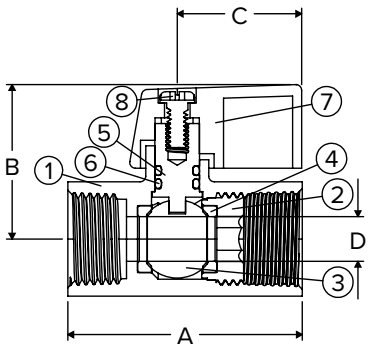

- Chrome-Plated Brass
- Single O-Ring Stem Design
- Blow-Out Proof Stem
- 100% Leak Tested

VALVE SEAT RATINGS

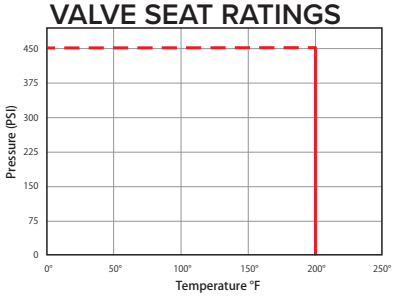

PART NUMBER	SIZE	A	B	C	D
FIP X FIP					
100-430	1/8" FIP X 1/8" FIP	1.5	1.09	0.89	0.31
100-431	1/4" FIP X 1/4" FIP	1.62	1.09	0.89	0.31
100-432	3/8" FIP X 3/8" FIP	1.65	1.09	0.89	0.31
100-433	1/2" FIP X 1/2" FIP	1.96	1.11	0.89	0.35
FIP X MIP					
100-440	1/8" FIP X 1/8" MIP	1.56	1.09	0.85	0.31
100-441	1/4" FIP X 1/4" MIP	1.62	1.09	0.89	0.31
100-442	3/8" FIP X 3/8" MIP	1.67	1.09	0.89	0.31
100-443	1/2" FIP X 1/2" MIP	1.96	1.11	0.89	0.35

T-83C

FULL PORT • THREADED CONNECTION • 400 WOG • INTEGRATED STRAINER

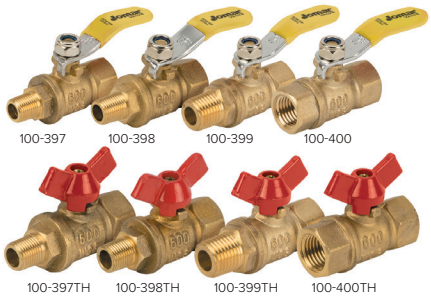

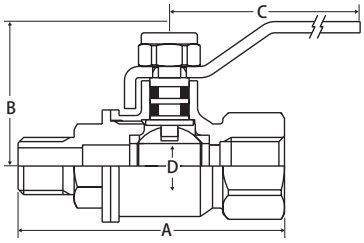

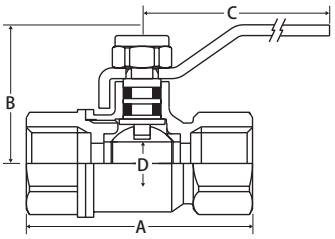

- Large raised wrench flats
- 2 Buna-N O-Rings
- 100% leak tested

VALVE SEAT RATINGS

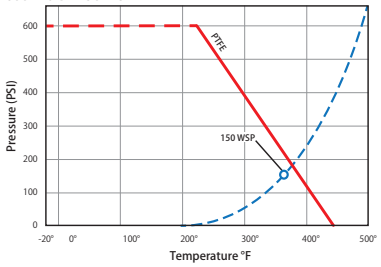

PART NUMBER	SIZE	A	B	C	D
LEVER HANDLE					
100-397	1/8" FIP X 1/8" MIP	1.90	1.07	1.77	0.28
100-398	1/4" FIP X 1/8" MIP	1.93	1.07	1.77	0.28
100-399	1/4" FIP X 1/4" MIP	2.01	1.07	1.77	0.28
100-400	1/4" FIP X 1/4" FIP	1.65	1.07	1.77	0.28
T-HANDLE					
100-397TH	1/8" FIP X 1/8" MIP	1.90	1.10	1.33	0.28
100-398TH	1/4" FIP X 1/8" MIP	1.93	1.10	1.33	0.28
100-399TH	1/4" FIP X 1/4" MIP	2.01	1.10	1.33	0.28
100-400TH	1/4" FIP X 1/4" FIP	1.65	1.10	1.33	0.28

PF-86-M

2 PIECE • MINI VALVE • MNPT X PUSH FIT CONNECTION • 145 PSI

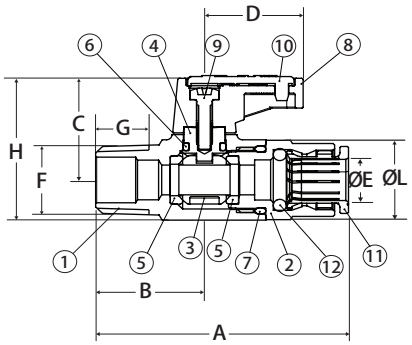

- FKM O-Rings
- Corrosion resistant
- Applicable in limited spaces
- Chrome plated
- 100% Made in Italy

PART NUMBER	SIZE	DN	A	B	C	D	ØE	F	G	H	SW I	ØL
186-730	1/8" MNPT X 5/32" PF	0.24	1.57	0.69	0.83	0.73	0.16	NPT1 /8"	0.27	1.14	0.55	0.63
186-731	1/8" MNPT X 1/4" PF	0.24	1.59	0.69	0.83	0.73	0.26	NPT 1/8"	0.27	1.14	0.55	0.63
186-741	1/4" MNPT X 1/4" PF	0.24	1.71	0.81	0.83	0.73	0.26	NPT 1/4"	0.4	1.14	0.55	0.63
186-743	3/8" MNPT X 3/8" PF	0.31	2.05	0.83	0.89	0.73	0.38	NPT 3/8"	0.41	1.26	0.67	0.76

© 2025 JOMAR VALVE | P: 586.268.1220 | F: 586.979.8615 | JOMARVALVE.COM

PF-86-PF

2 PIECE • MINI VALVE • PUSH FIT X PUSH FIT CONNECTION • 145 PSI

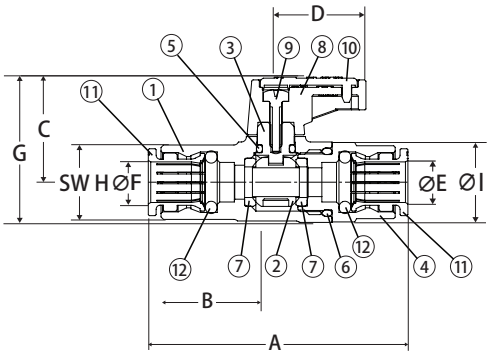

- FKM O-Rings
- Corrosion resistant
- Applicable in limited spaces
- Chrome plated
- 100% Made in Italy

PART NUMBER	SIZE	DN	A	B	C	D	ØE	ØF	G	SW H	ØI
186-530	1/8" PF X 1/8" PF	0.24	1.73	0.87	0.83	0.73	0.13	0.13	1.14	0.55	0.63
186-531	1/4" PF X 1/4" PF	0.24	1.97	0.96	0.83	0.73	0.26	0.26	1.14	0.55	0.63
186-533	3/8" PF X 3/8" PF	0.31	2.05	0.83	0.89	0.73	0.38	0.38	1.26	0.67	0.76

JF-100T

2 PIECE • FULL PORT • THREADED CONNECTION • 600 WOG

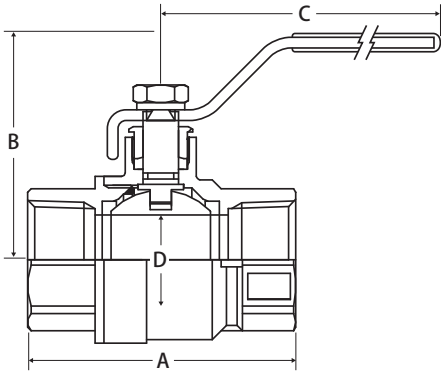

- Gland follower and single O-Ring stem design
- Blow-out proof stem
- 100% leak tested
- 29 in-Hg vacuum rating

VALVE SEAT RATINGS

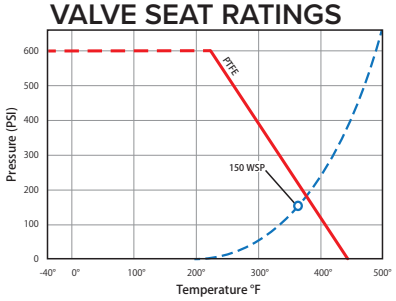

PART NUMBER	SIZE	A	B	C	D	CV
100-101	1/4"	1.73	1.69	3.35	0.39	7.7
100-102	3/8"	1.73	1.69	3.35	0.39	7.8
100-103	1/2"	2.28	1.81	3.35	0.59	16.8
100-104	3/4"	2.52	2.36	4.29	0.75	34.8
100-105	1"	2.97	2.52	4.29	0.98	52.2
100-106	1-1/4"	3.44	2.52	5.63	1.26	112.5
100-107	1-1/2"	3.88	2.72	5.63	1.57	174.0
100-108	2"	4.29	3.03	5.63	1.97	255.2
100-109	2-1/2"	5.59	4.25	7.76	2.52	350.3
100-110	3"	6.34	4.92	8.37	2.95	563.7
100-111	4"	7.83	5.85	9.25	3.90	879.3

JF-100S

2 PIECE • FULL PORT • SOLDER CONNECTION • 600 WOG

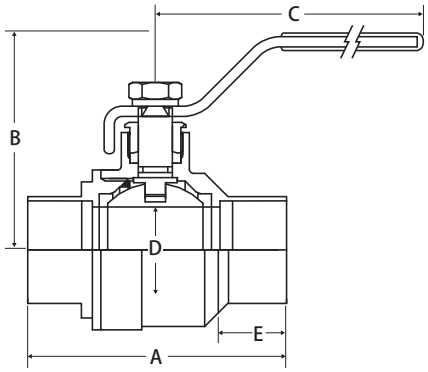

- Gland follower and single O-Ring stem design
- Blow-out proof stem
- 100% leak tested
- 29 in-Hg vacuum rating

VALVE SEAT RATINGS

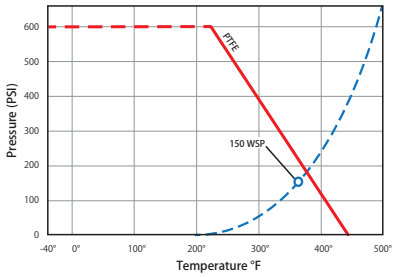

PART NUMBER	SIZE	A	B	C	D	E
100-113	1/2"	2.17	1.81	3.35	0.59	0.50
100-114	3/4"	2.80	2.36	4.29	0.75	0.75
100-115	1"	3.27	2.52	4.29	0.98	0.86
100-116	1-1/4"	4.10	2.52	5.63	1.26	1.08
100-117	1-1/2"	4.33	2.72	5.63	1.57	0.98
100-118	2"	5.34	3.03	5.63	1.97	1.21
100-119	2-1/2"	6.39	4.25	7.76	2.52	1.48
100-120	3"	7.10	4.92	8.37	2.95	1.66
100-121	4"	9.56	5.85	9.25	3.90	2.22
100-110	3"	6.34	4.92	8.37	2.95	563.7
100-111	4"	7.83	5.85	9.25	3.90	879.3

JF-100TFM

2 PIECE • FULL PORT• MIP X FIP CONNECTION • 600 WOG

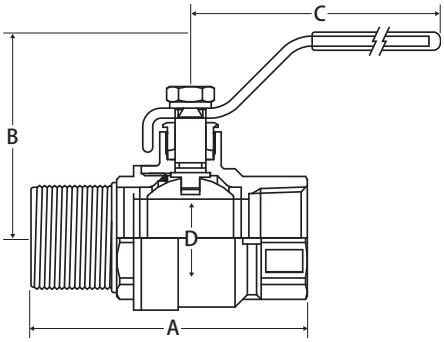

- Gland follower and single O-Ring stem design
- Blow-out proof stem
- 100% leak tested
- 29 in-Hg vacuum rating

VALVE SEAT RATINGS

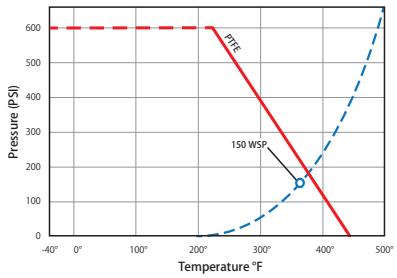

PART NUMBER	SIZE	A	B	C	D
100-131	1/4"	2.05	1.69	3.54	0.39
100-132	3/8"	2.13	1.69	3.54	0.39
100-133	1/2"	2.50	1.81	3.54	0.59
100-134	3/4"	3.00	2.12	4.55	0.75
100-135	1"	3.27	2.25	4.55	0.98

© 2025 JOMAR VALVE | P: 586.268.1220 | F: 586.979.8615 | JOMARVALVE.COM

JF-100TS

2 PIECE • FULL PORT • SAE THREADED CONNECTION • 600 WOG

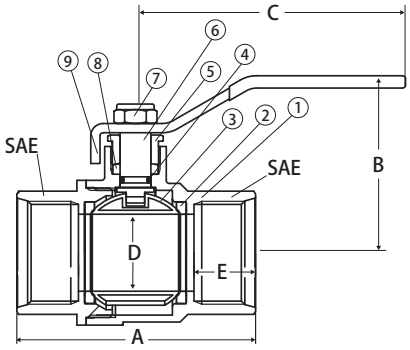

- Forged brass body
- Adjustable packing gland
- Blow-out proof stem
- SAE J1926-1 threads
- 100% leak tested
- 29 in-Hg vacuum rating

PART NUMBER	SIZE	A	B	C	D	E	SAE
100-106-20	1-1/4"	3.48	2.53	5.63	1.26	0.78	1-5/8"-12UN
100-107-24	1-1/2"	3.92	2.74	5.63	1.57	0.8	1-7/8"-12UN

VALVE SEAT RATINGS

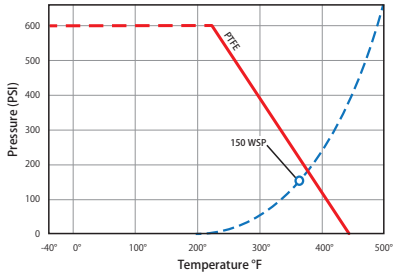

Lead Free Add-a-Valve®

EMERGENCY SHUT OFF DEVICE

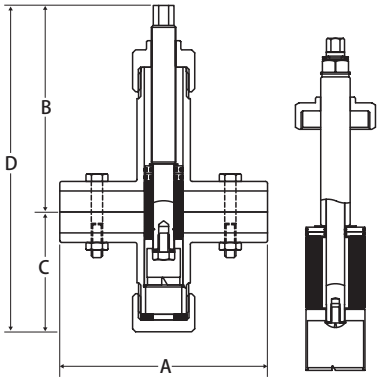

- Dezincification resistant brass alloy
- Eliminates facility shutdowns
- Cuts through copper tubing with a hardened steel stem cutter
- Expands a Viton® seal across cut to stop the flow
- No pipe freezing, no bulky nitrogen tanks, no complete shutdown
- Bottom cleanout cap serves as line tap
- Lead free sweat ball valve included in package
- Loc-Tite® gasket sealant included
- U.S. and Canadian Patent No. 5,316,037
- Can be installed on potable hot/cold water and water/glycol systems
- IAPMO certified - NSF 372
- Wetted surfaces contain less than .25% lead content

PART NUMBER	SIZE	A	B	C	D (OPEN)	D (CLOSED)
800-103ADDG	1/2"	2.99	5.08	1.61	6.69	5.12
800-104ADDG	3/4"	3.31	6.3	2.48	8.78	6.77
800-105ADDG	1"	3.66	7.48	2.8	10.28	7.68
800-106ADDG	1-1/4"	4.25	9.77	2.8	12.72	9.77
800-107ADDG	1-1/2"	4.65	10.43	3.58	13.86	10.43
800-108ADDG	2"	7.2	12.17	3.98	16.61	12.17

T-CS-1001N-SS

LEAD FREE

2 PIECE • FULL PORT • THREADED CONNECTION • 1000 WOG
STAINLESS STEEL TRIM

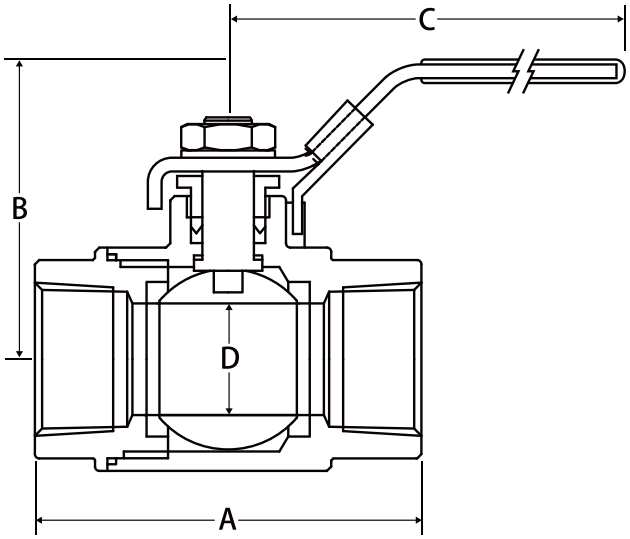

- Solid ball construction
- Latch lock handle may be locked in open or closed position
- 29 in-Hg vacuum rating
- 100% leak tested
- Wetted surfaces contain less than .25% lead content

VALVE SEAT RATINGS

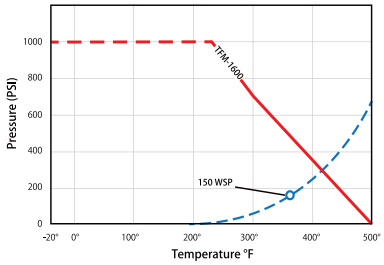

PART NUMBER	SIZE	A	B	C	D
100-971	1/4"	2.20	2.20	4.21	0.43
100-972	3/8"	2.20	2.20	4.21	0.43
100-973	1/2"	2.60	2.30	4.21	0.56
100-974	3/4"	2.99	2.79	5.73	0.81
100-975	1"	3.54	2.96	5.73	1.00
100-976	1-1/4"	3.94	3.56	7.45	1.25
100-977	1-1/2"	4.41	3.84	7.45	1.50
100-978	2"	5.00	4.24	8.08	1.97

T-CS-2000N-SS

LEAD FREE

2 PIECE • STANDARD PORT • THREADED CONNECTION • 2000 WOG
STAINLESS STEEL TRIM

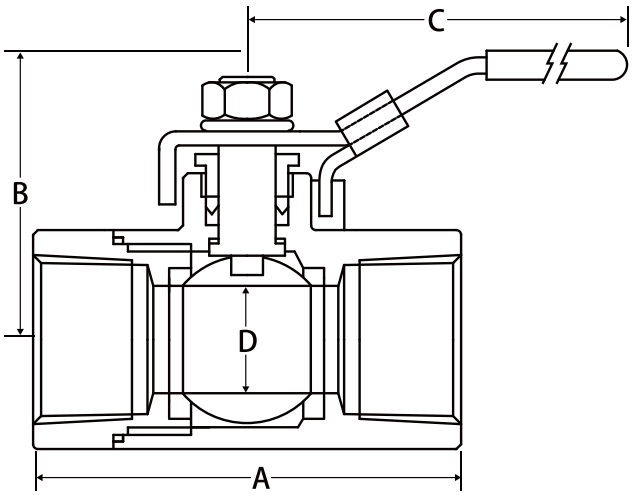

- Solid ball construction
- Latch lock handle may be locked in open or closed position
- 29 in-Hg vacuum rating
- 100% leak tested
- Wetted surfaces contain less than .25% lead content

VALVE SEAT RATINGS

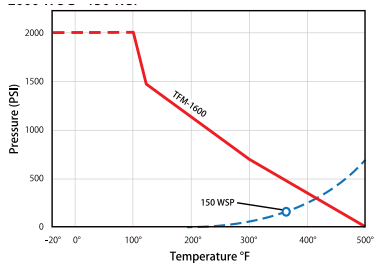

PART NUMBER	SIZE	A	B	C	D
100-951	1/4"	2.07	1.76	4.33	0.37
100-952	3/8"	2.07	1.76	4.33	0.37
100-953	1/2"	2.34	1.92	4.33	0.50
100-954	3/4"	2.80	2.40	5.83	0.69
100-955	1"	3.23	2.56	5.83	0.87
100-956	1-1/4"	3.57	2.74	7.76	1.00
100-957	1-1/2"	4.04	2.98	7.76	1.25
100-958	2"	4.63	3.17	7.76	1.50

© 2025 JOMAR VALVE | P: 586.268.1220 | F: 586.979.8615 | JOMARVALVE.COM

T-CS-1000N-SS-4B

LEAD FREE

3 PIECE • 4 BOLT • SWING OUT BODY • FULL PORT • THREADED CONNECTION • 1000 WOG STAINLESS STEEL TRIM

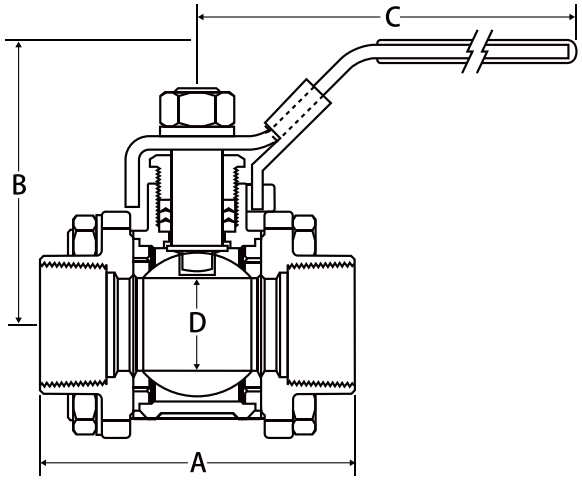

- Latch lock handle may be locked in open or closed positions
- 29 in-Hg vacuum rating
- Repair kits available
- 100% leak tested
- Wetted surfaces contain less than .25% lead content

VALVE SEAT RATINGS

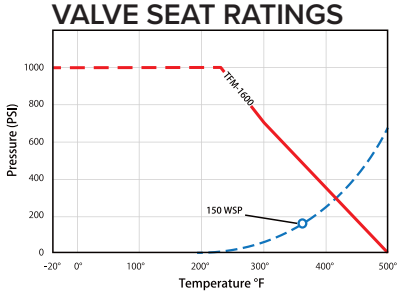

PART NUMBER	SIZE	A	B	C	D	TORQUE
500-403	1/2"	2.76	2.38	4.30	0.56	80
500-404	3/4"	3.03	2.87	5.81	0.81	150
500-405	1"	3.63	2.95	5.81	1.00	250
500-406	1-1/4"	4.14	3.66	7.44	1.25	320
500-407	1-1/2"	4.73	3.94	7.44	1.50	400

S-CS-1000N-SS-4B

LEAD FREE

3 PIECE • 4 BOLT • SWING OUT BODY • FULL PORT • SOCKET WELD • 1000 WOG STAINLESS STEEL TRIM

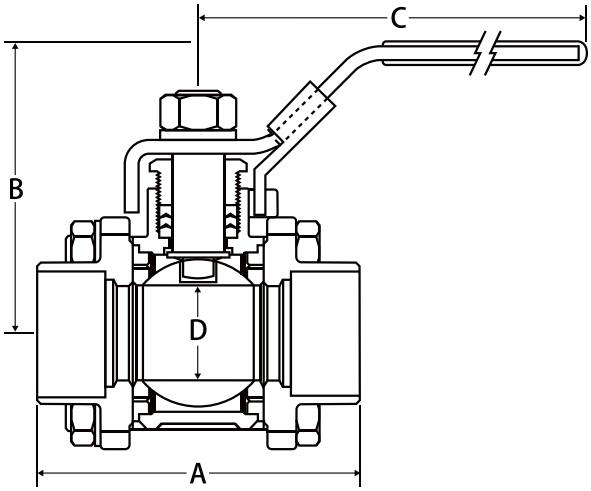

- Latch lock handle may be locked in open or closed positions
- 29 in-Hg vacuum rating
- Repair kits available
- 100% leak tested
- Wetted surfaces contain less than .25% lead content

VALVE SEAT RATINGS

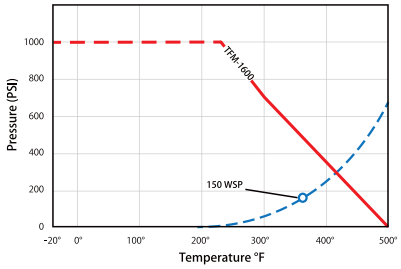

PART NUMBER	SIZE	A	B	C	D	TORQUE
500-503	1/2"	2.76	2.38	4.30	0.56	80
500-504	3/4"	3.03	2.87	5.81	0.81	150
500-505	1"	3.63	2.95	5.81	1.00	250
500-506	1-1/4"	4.14	3.66	7.44	1.25	320
500-507	1-1/2"	4.73	3.94	7.44	1.50	400
500-508	2"	5.43	4.25	7.81	1.97	480

T-CS-2001N-SS-4B

3 PIECE 4 BOLT ENCLOSED • STANDARD PORT • THREADED CONNECTION • 2000 WOG STAINLESS STEEL TRIM

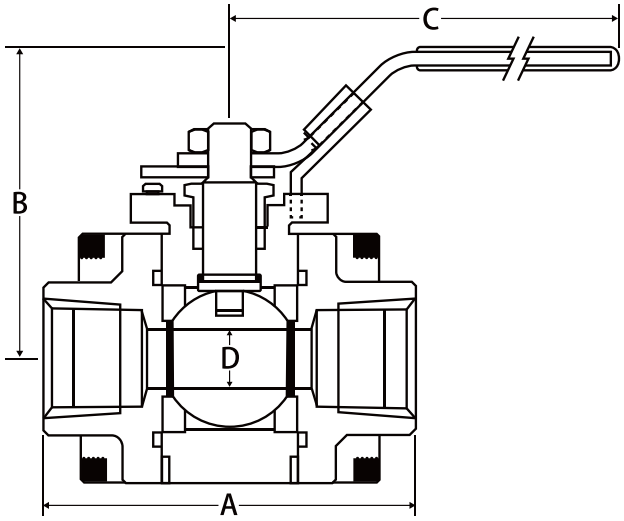

- Latch lock handle may be locked in open or closed position
- Solid ball construction
- Blow-out proof stem
- 29 in-Hg vacuum rating
- Repair kits available
- Fire safe rated
- 100% leak tested
- Wetted surfaces contain less than .25% lead content

VALVE SEAT RATINGS

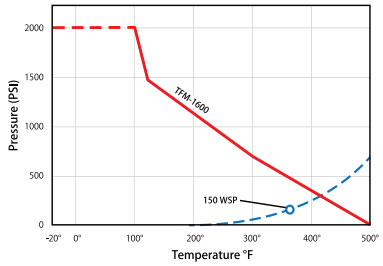

PART NUMBER	SIZE	A	B	C	D	TORQUE
601-613	1/2"	2.72	2.47	4.15	0.43	85
601-614	3/4"	2.94	2.70	4.15	0.55	150
601-615	1"	3.50	3.19	5.00	0.81	180
601-616	1-1/4"	3.90	3.64	5.98	0.98	210
601-617	1-1/2"	4.42	3.88	7.76	1.25	320
601-618	2"	5.04	4.09	7.76	1.50	440

S-CS-2001N-SS-4B

3 PIECE 4 BOLT ENCLOSED • STANDARD PORT • SOCKET WELD • 2000 WOG STAINLESS STEEL TRIM

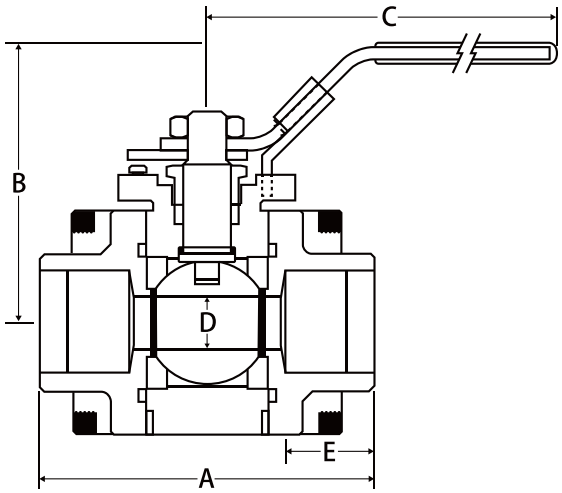

- Latch lock handle may be locked in open or closed position
- Reversible handle for multiple applications
- Solid ball construction
- Blow-out proof stem
- 29 in-Hg vacuum rating
- Repair kits available
- Fire safe rated
- 100% leak tested
- Wetted surfaces contain less than .25% lead content

VALVE SEAT RATINGS

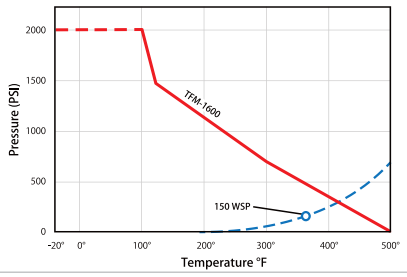

PART NUMBER	SIZE	A	B	C	D	E	TORQUE
601-633	1/2"	2.72	2.47	4.15	0.43	0.38	85
601-634	3/4"	2.94	2.70	4.15	0.55	0.50	150
601-635	1"	3.50	3.19	5.00	0.81	0.50	180
601-636	1-1/4"	3.90	3.64	5.98	0.98	0.50	210
601-637	1-1/2"	4.42	3.88	7.76	1.25	0.50	320
601-638	2"	5.04	4.09	7.76	1.50	0.62	440

© 2025 JOMAR VALVE | P: 586.268.1220 | F: 586.979.8615 | JOMARVALVE.COM

T-CS-2002N-SS-DUE

5 PIECE • FULL PORT • DOUBLE UNION END • THREADED CONNECTION • 3000 WOG WITH STAINLESS STEEL TRIM

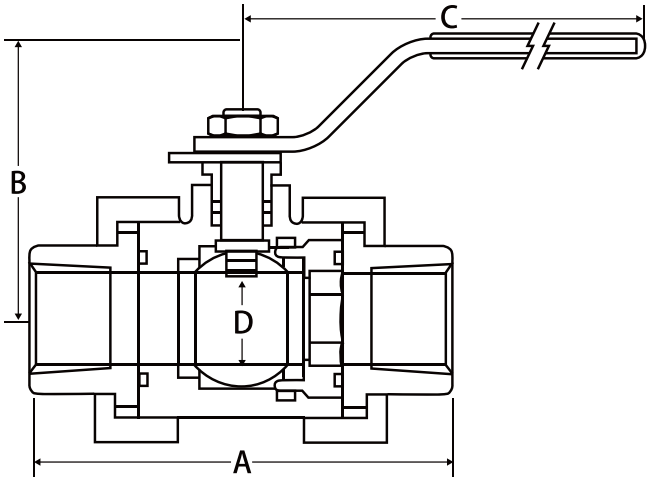

- Solid ball construction
- 5 piece construction
- Mounting pad
- Reversible handle
- Latch lock handle available
- Adjustable stem packing with blow-out proof stem
- 29 in-Hg vacuum rating
- Repair kits available
- 100% leak tested
- Wetted surfaces contain less than .25% lead content

VALVE SEAT RATINGS

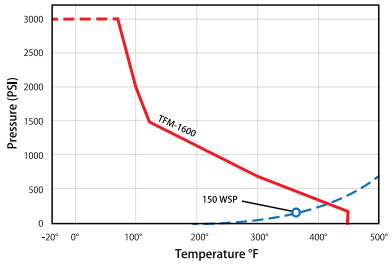

PART NUMBER	SIZE	A	B	C	D	TORQUE
100-991	1/4"	3.58	2.40	4.17	0.44	35
100-992	3/8"	3.58	2.40	4.17	0.44	35
100-993	1/2"	3.58	2.40	4.17	0.62	65
100-994	3/4"	3.74	2.79	6.97	0.81	100
100-995	1"	4.29	2.96	6.97	1.00	120
100-996	1-1/4"	4.61	3.38	9.84	1.25	210
100-997	1-1/2"	5.24	3.67	9.84	1.50	300
100-998	2"	5.71	4.52	12.24	1.97	400

S-CS-2002N-SS-DUE

5 PIECE • FULL PORT • DOUBLE UNION END • SOCKET WELD • 3000 WOG STAINLESS STEEL TRIM

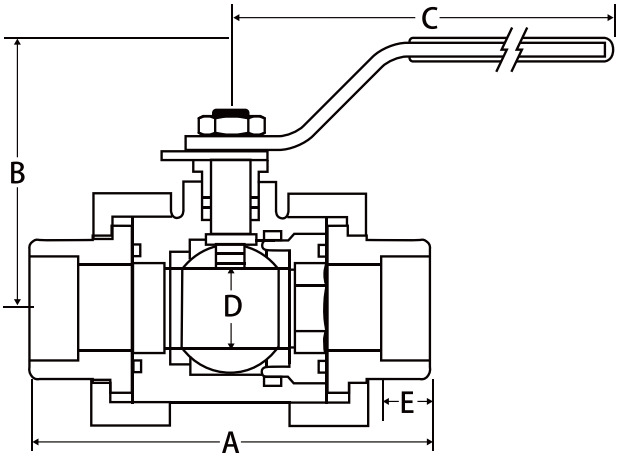

- Solid ball construction
- 5 piece construction
- Mounting pad
- Reversible handle
- Latch lock handle available
- Adjustable stem packing with blow-out proof stem
- 29 in-Hg vacuum rating
- Repair kits avaialbe
- 100% leak tested
- Wetted surfaces contain less than .25% lead content

VALVE SEAT RATINGS

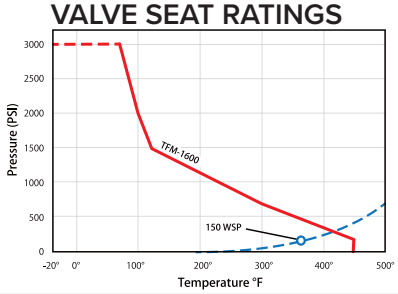

PART NUMBER	SIZE	A	B	C	D	E	TORQUE
101-991	1/4"	3.58	2.40	4.17	0.44	0.41	35
101-992	3/8"	3.58	2.40	4.17	0.44	0.41	35
101-993	1/2"	3.58	2.40	4.17	0.62	0.44	65
101-994	3/4"	3.74	2.79	6.97	0.81	0.56	100
101-995	1"	4.29	2.96	6.97	1.00	0.72	120
101-996	1-1/4"	4.61	3.38	9.84	1.25	0.72	210
101-997	1-1/2"	5.24	3.67	9.84	1.50	0.72	300
101-998	2"	5.71	4.52	12.24	1.97	0.84	400

FL-CS-100-150

LEAD FREE

2 PIECE • FULL PORT • CARBON STEEL • FLANGED CONNECTION • CLASS 150 STAINLESS STEEL TRIM

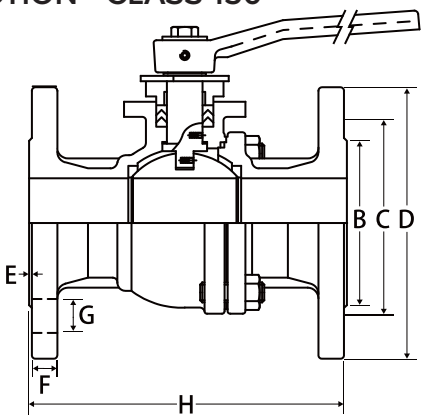

- Wrench operator
- Fire safe stem and body graphite seals
- Air tested seat leakage: 85 PSI
- Hydraulic tested body: 427 PSI
- Locking device comes standard
- Repair kits available
- 100% leak tested
- Wetted surfaces contain less than .25% lead content

VALVE SEAT RATINGS

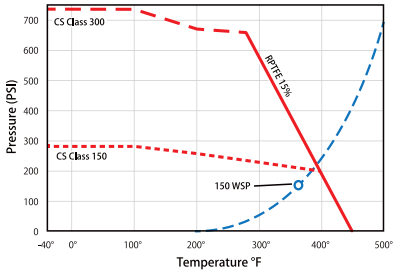

PART NUMBER	SIZE	A	B	C	D	E	F	G	H	BOLTS	TORQUE
600-203	1/2"	0.63	1.38	2.38	3.50	0.06	0.44	0.63	4.25	4	48
600-204	3/4"	0.79	1.69	2.76	3.86	0.06	0.44	0.63	4.61	4	90
600-205	1"	0.98	2.01	3.13	4.25	0.06	0.44	0.63	5.00	4	148
600-207	1-1/2"	1.50	2.87	3.88	5.00	0.06	0.56	0.63	6.50	4	270
600-208	2"	1.97	3.62	4.74	5.98	0.06	0.63	0.75	7.01	4	395
600-209	2-1/2"	2.56	4.13	5.49	7.01	0.06	0.69	0.75	7.48	4	609
600-210	3"	3.15	5.00	6.00	7.48	0.06	0.75	0.75	7.99	4	913
600-211	4"	3.94	6.18	7.50	9.02	0.06	0.94	0.75	9.02	8	1443
600-212	6"	5.98	8.50	9.51	10.98	0.06	1.00	0.87	15.51	8	4870
600-213*	8"	7.99	10.63	11.75	13.50	0.06	1.12	0.87	17.99	8	8522
600-214*	10"	9.84	12.76	14.25	15.98	0.06	1.19	0.98	20.98	12	-
600-215*	12"	11.81	12.52	17.01	19.02	0.06	1.25	0.98	24.02	12	-

*8-12" SPECIAL ORDER

FL-CS-100-300

LEAD FREE

2 PIECE • FULL PORT • CARBON STEEL • FLANGED CONNECTION • CLASS 300 STAINLESS STEEL TRIM

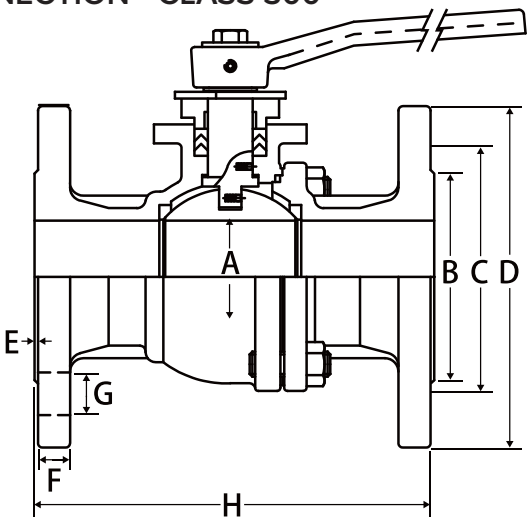

- Wrench operator
- Fire safe stem and body graphite seals
- Air tested seat leakage: 85 PSI
- Hydraulic tested body: 1124 PSI
- Locking device comes standard
- Repair kits available
- 100% leak tested
- Wetted surfaces contain less than .25% lead content

VALVE SEAT RATINGS

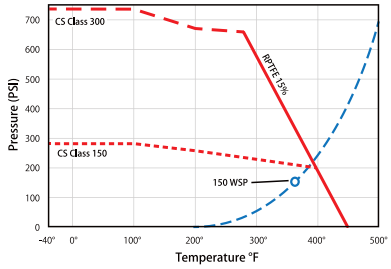

PART NUMBER	SIZE	A	B	C	D	E	F	G	H	BOLTS	TORQUE
600-228	2"	1.97	3.62	5.00	6.50	0.06	0.88	0.75	8.50	8	1068
600-230	3"	3.15	5.00	6.62	8.27	0.06	1.17	0.88	11.10	8	1752
600-231	4"	3.94	6.19	7.88	10.00	0.06	1.25	0.88	12.00	8	3216
600-232	6"	5.90	8.51	10.64	12.53	0.06	1.44	0.88	15.88	12	6900
600-233*	8"	7.88	10.64	13.00	15.01	0.06	1.62	1.00	19.75	12	16620

*8-12" SPECIAL ORDER

© 2025 JOMAR VALVE | P: 586.268.1220 | F: 586.979.8615 | JOMARVALVE.COM

T-SS-1001N

LEAD FREE

2 PIECE • FULL PORT • THREADED CONNECTION • 1000 WOG

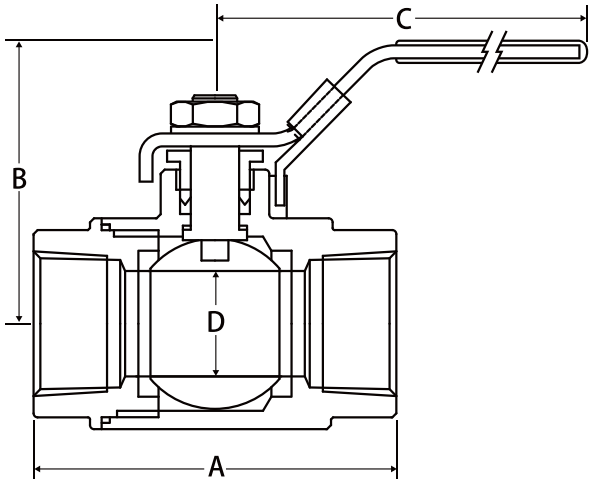

- Solid ball construction
- Latch lock handle may be locked in open or closed positions
- 29 in-Hg vacuum rating
- 100% leak tested
- Wetted surfaces contain less than .25% lead content

VALVE SEAT RATINGS

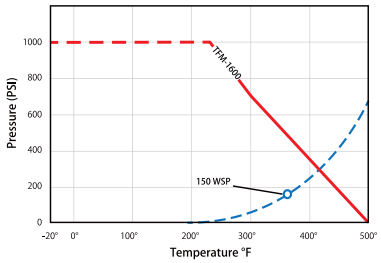

PART NUMBER	SIZE	A	B	C	D	TORQUE
100-961	1/4"	2.20	2.20	4.21	0.43	40
100-962	3/8"	2.20	2.20	4.21	0.43	40
100-963	1/2"	2.60	2.30	4.21	0.56	40
100-964	3/4"	2.99	2.79	5.73	0.81	60
100-965	1"	3.54	2.96	5.73	1.00	70
100-966	1-1/4"	3.94	3.56	7.45	1.25	110
100-967	1-1/2"	4.41	3.84	7.45	1.50	170
100-968	2"	5.00	4.24	8.08	1.97	250

T-SS-2000N

LEAD FREE

2 PIECE • STANDARD PORT • THREADED CONNECTION • 2000 WOG

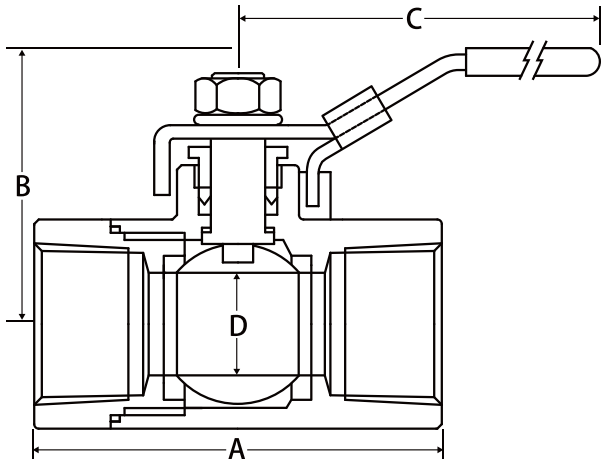

- Solid ball construction
- Latch lock handle may be locked in open or closed positions
- 29 in-Hg vacuum rating
- 100% leak tested
- Wetted surfaces contain less than .25% lead content

VALVE SEAT RATINGS

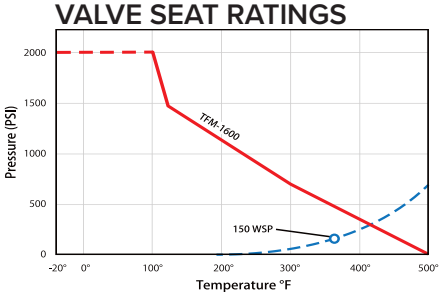

PART NUMBER	SIZE	A	B	C	D	TORQUE
100-931	1/4"	2.34	1.94	4.06	0.44	35
100-932	3/8"	2.34	1.94	4.06	0.49	35
100-933	1/2"	2.34	1.94	4.06	0.49	65
100-934	3/4"	2.63	2.21	4.06	0.59	100
100-935	1"	2.98	2.49	4.29	0.79	120
100-936	1-1/4"	3.49	3.08	5.71	0.98	210
100-937	1-1/2"	3.84	3.24	5.71	1.26	300
100-938	2"	4.80	3.66	7.09	1.50	400

T-SS-2000N-FP

LEAD FREE

2 PIECE • FULL PORT • THREADED CONNECTION • 2000 WOG

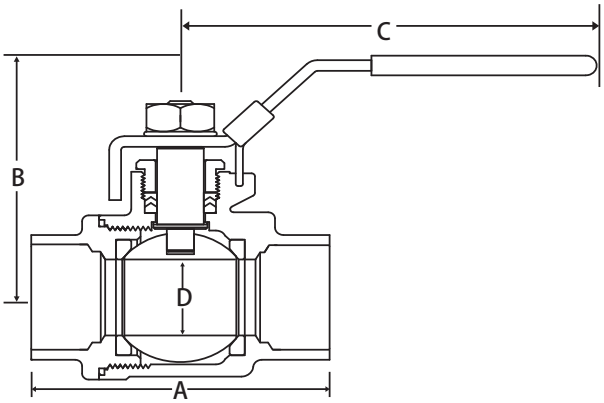

- Solid Ball Construction
- 29 in-Hg vacuum rating
- Latch lock handle may be locked in open or closed position
- 100% leak tested
- Wetted surfaces contain less than .25% lead content

PART NUMBER	SIZE	A	B	C	D
101-941	1/4"	2.38	2.13	4.06	0.46
101-942	3/8"	2.38	2.13	4.06	0.51
101-943	1/2"	2.52	2.23	4.06	0.59
101-944	3/4"	3.03	2.51	4.96	0.79
101-945	1"	3.54	3.02	6.46	0.98
101-946	1-1/4"	3.94	3.26	6.46	1.26
101-947	1-1/2"	4.65	3.76	7.48	1.5
101-948	2"	5.43	4.15	7.48	1.97
101-949	2-1/2"	6.56	5.59	9.72	2.56
101-950	3"	7.6	6.02	9.72	3.15
101-951	4"	10.24	7.18	12.6	3.94

T-SS-2000N-MF

LEAD FREE

2 PIECE • FULL PORT • MIP X FIP CONNECTION • 2000 WOG

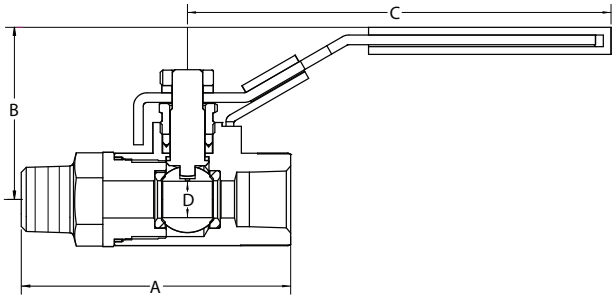

- Solid Ball Construction
- 29 in-Hg vacuum rating
- Latch lock handle may be locked in open or closed position
- 100% leak tested
- Wetted surfaces contain less than .25% lead content

PART NUMBER	SIZE	A	B	C	D	TORQUE
101-931	1/4"	2.76	1.75	4.06	0.38	35
101-933	1/2"	3.15	1.94	4.06	0.49	65
101-934	3/4"	3.74	2.21	4.06	0.59	100
101-935	1"	4.25	2.49	4.29	0.79	120

© 2025 JOMAR VALVE | P: 586.268.1220 | F: 586.979.8615 | JOMARVALVE.COM

T-SS-2000N-DH

LEAD FREE

THREADED CONNECTION • SPRING RETURN HANDLE

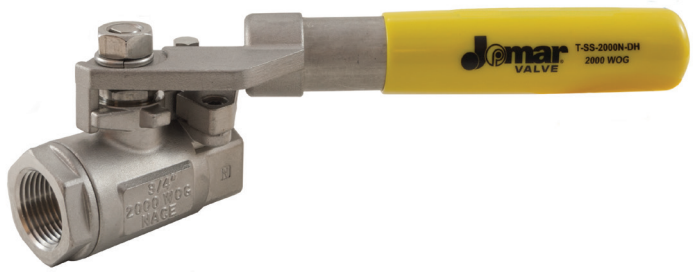

1/4"- 1"

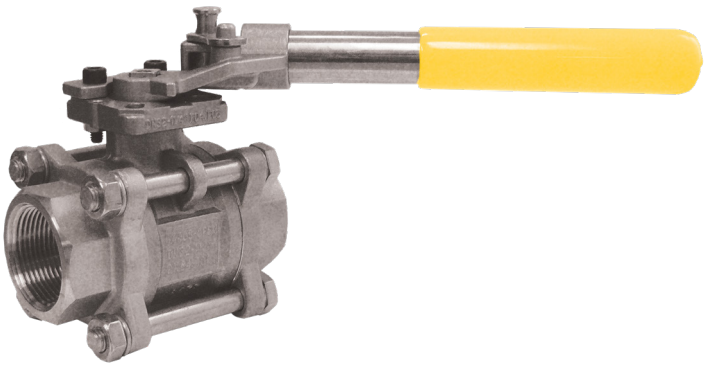

1-1/4"- 2"

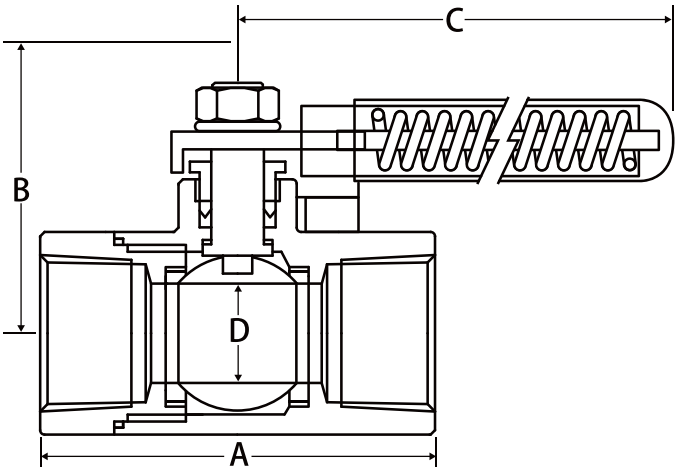

- Fail safe position
- Solid ball construction
- 29 in-Hg vacuum rating
- 100% leak tested
- Wetted surfaces contain less than .25% lead content

VALVE SEAT RATINGS

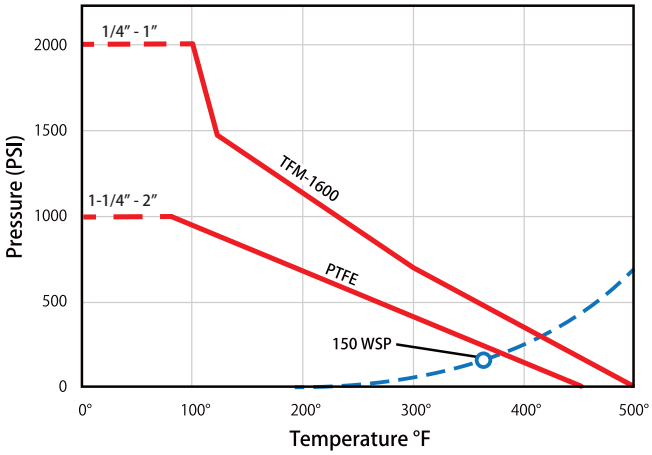

PART NUMBER	SIZE	PORT	WOG	NUMBER OF PIECES	BOLTS
100-931DH	1/4"	STANDARD	2000	2 PIECE	-
100-932DH	3/8"	STANDARD	2000	2 PIECE	-
100-933DH	1/2"	STANDARD	2000	2 PIECE	-
100-934DH	3/4"	STANDARD	2000	2 PIECE	-
100-935DH	1"	STANDARD	2000	2 PIECE	-
100-936DH	1-1/4"	FULL	1000	3 PIECE	4
100-937DH	1-1/2"	FULL	1000	3 PIECE	4
100-938DH	2"	FULL	1000	3 PIECE	4

T-SS-1050N-3L

2 PIECE • REDUCED PORT • 3 WAY DISPENSER • THREADED CONNECTION • 1000 WOG

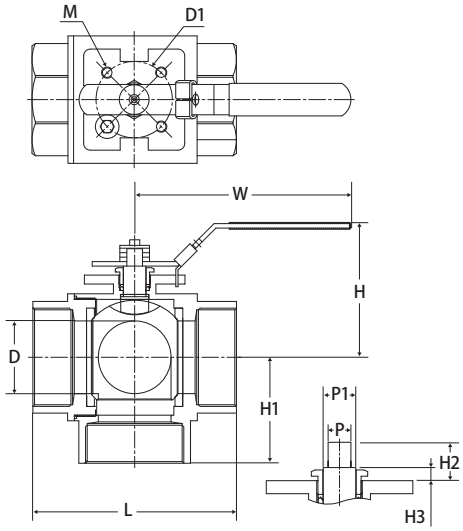

- Blow-out proof stem
- Locking handle
- Antistatic device
- 180° handle prevents cross-contamination
- ISO 5211 mounting pad

PART NUMBER	SIZE	D	L	H	H1	H2	H3	W	P	P1	D1	M	TORQUE
500-203	1/2"	0.49	2.6	2.36	1.36	0.35	0.15	5.25	0.35	0.47	1.42	M5*0.8	62.1
500-204	3/4"	0.63	3.03	2.61	1.56	0.41	0.22	5.25	0.35	0.47	1.42	M5*0.8	82.8
500-205	1"	0.79	3.48	2.75	1.81	0.41	0.22	5.25	0.35	0.47	1.65	M5*0.8	138.1

Pressure/Temperature Rating

- 1000 WOG
- -4°F to 392°F

T-SS-900N

CERTIFIED LEAD FREE

2 PIECE • FULL PORT • THREADED CONNECTION • 1000 WOG

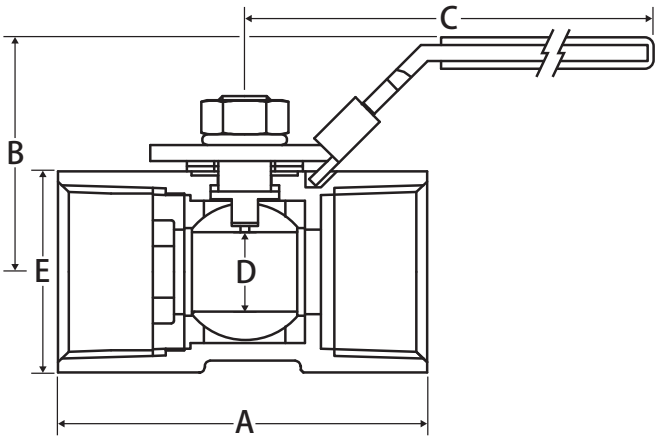

- Solid ball construction
- Latch lock handle may be locked in open or closed positions
- 100% leak tested
- Wetted surfaces contain less than .25% lead content

VALVE SEAT RATINGS

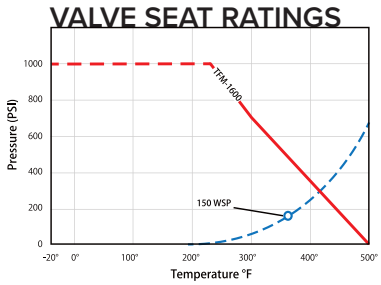

PART NUMBER	SIZE	A	B	C	D
100-903	1/2"	2.13	1.99	3.51	0.59
100-904	3/4"	2.30	2.19	3.94	0.79
100-905	1"	2.85	2.50	4.42	0.98
100-906	1-1/4"	3.27	2.93	5.48	1.26
100-907	1-1/2"	3.67	3.54	5.53	1.50
100-908	2"	4.18	3.54	6.10	1.97

© 2025 JOMAR VALVE | P: 586.268.1220 | F: 586.979.8615 | JOMARVALVE.COM

T-SS-1000N-4B

LEAD FREE

3 PIECE • 4 BOLT • SWING OUT BODY • FULL PORT • THREADED CONNECTION • 1000 WOG

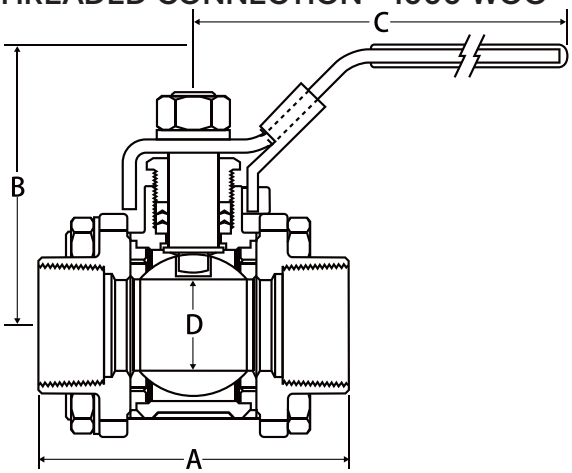

- Latch lock handle may be locked in open or closed positions
- 29 in-Hg vacuum rating
- Repair kits available
- 100% leak tested
- Wetted surfaces contain less than .25% lead content

VALVE SEAT RATINGS

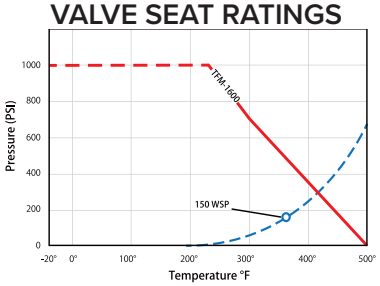

PART NUMBER	SIZE	A	B	C	D
500-301	1/4"	2.37	2.18	4.30	0.37
500-302	3/8"	2.37	2.18	4.30	0.37
500-303	1/2"	2.76	2.38	4.30	0.56
500-304	3/4"	3.03	2.87	5.81	0.81
500-305	1"	3.63	2.95	5.81	1.00
500-306	1-1/4"	4.14	3.66	7.44	1.25
500-307	1-1/2"	4.73	3.94	7.44	1.50
500-308	2"	5.43	4.25	7.81	1.97
500-310	3"	7.52	5.26	9.75	3.00
500-311	4"	8.54	6.57	11.88	3.93

TS-SS-1000N-4B

LEAD FREE

3 PIECE • 4 BOLT • SWING OUT BODY • FULL PORT • THREADED X SOCKET WELD CONNECTION • 1000 WOG

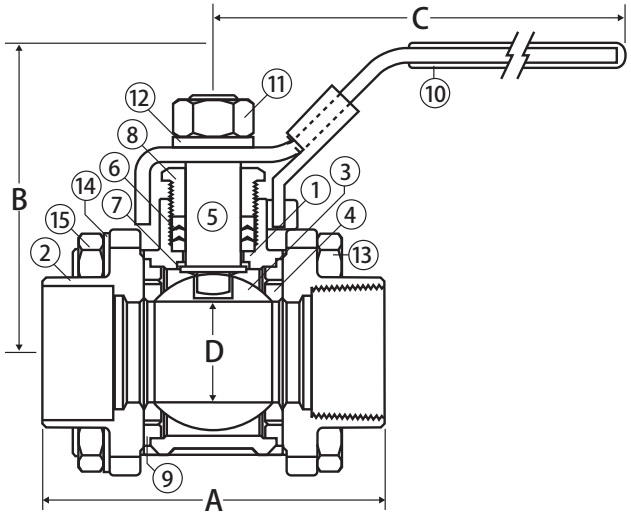

- Latch lock handle may be locked in open or closed positions
- 29 in-Hg vacuum rating
- Repair kits available
- 100% leak tested
- Wetted surfaces contain less than .25% lead content

VALVE SEAT RATINGS

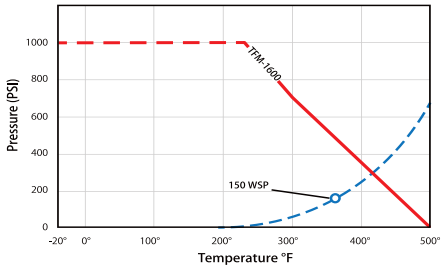

PART NUMBER	SIZE	A	B	C	D	TORQUE
500-376	1-1/4"	4.14	3.66	7.44	1.25	320
500-378	2"	5.43	4.25	7.81	1.97	480

S-SS-1000N-4B

LISTED · BAA · LEAD FREE

3 PIECE • 4 BOLT • SWING OUT BODY • FULL PORT • SOCKET WELD CONNECTION • 1000 WOG

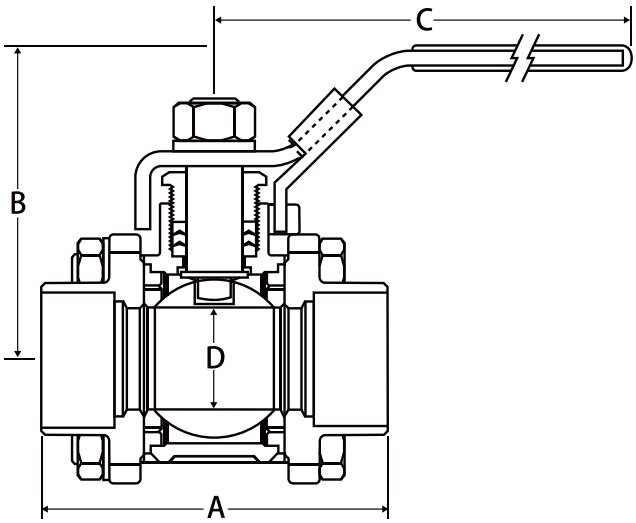

- Latch lock handle may be locked in open or closed positions
- 29 in-Hg vacuum rating
- Repair kits available
- 100% leak tested
- Wetted surfaces contain less than .25% lead content

VALVE SEAT RATINGS

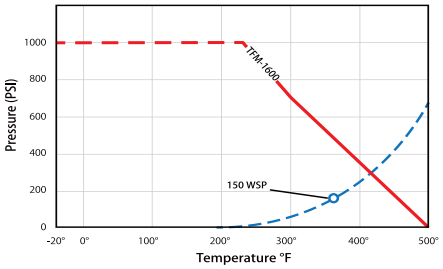

PART NUMBER	SIZE	A	B	C	D
500-343	1/2"	2.76	2.38	4.30	0.56
500-344	3/4"	3.03	2.87	5.81	0.81
500-345	1"	3.63	2.95	5.81	1.00
500-346	1-1/4"	4.14	3.66	7.44	1.25
500-347	1-1/2"	4.73	3.94	7.44	1.50
500-348	2"	5.43	4.25	7.81	1.97
500-350	3"	7.52	5.26	9.75	3.00
500-351	4"	8.54	6.57	11.88	3.93

T-SS-2001N-4B

LISTED · BAA · LEAD FREE

3 PIECE 4 BOLT ENCLOSED • STANDARD PORT • THREADED CONNECTION • 2000 WOG

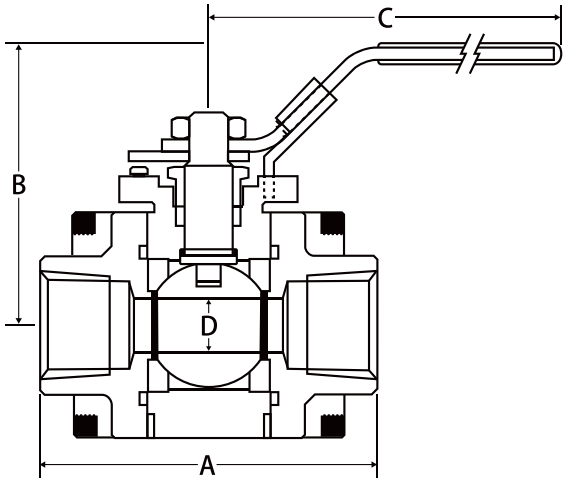

- Latch lock handle may be locked in open or closed position
- Solid ball construction
- Blow-out proof stem
- 29 in-Hg vacuum rating
- Repair kits available
- Fire safe rated
- 100% leak tested
- Wetted surfaces contain less than .25% lead content

VALVE SEAT RATINGS

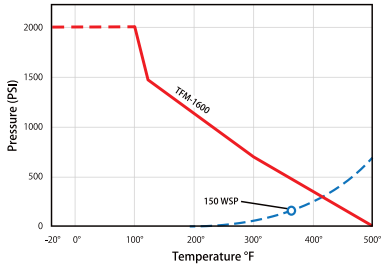

PART NUMBER	SIZE	A	B	C	D
601-603	1/2"	2.72	2.47	4.15	0.43
601-604	3/4"	2.94	2.70	4.15	0.55
601-605	1"	3.50	3.19	5.00	0.81
601-606	1-1/4"	3.90	3.64	5.98	0.98
601-607	1-1/2"	4.42	3.88	7.76	1.25
601-608	2"	5.04	4.09	7.76	1.50

*1-1/4" THROUGH 2" ARE 3 PIECE 4 BOLT PATTERN

© 2025 JOMAR VALVE | P: 586.268.1220 | F: 586.979.8615 | JOMARVALVE.COM

S-SS-2001N-4B

LEAD FREE

3 PIECE 4 BOLT ENCLOSED • STANDARD PORT • SOCKET WELD • 2000 WOG

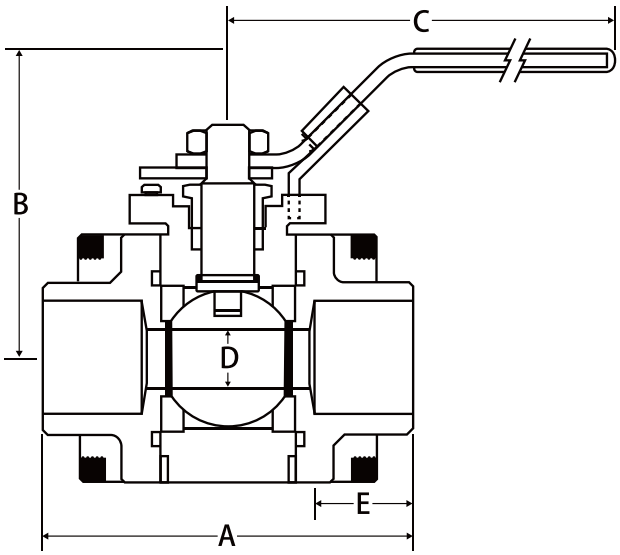

- Latch lock handle may be locked in open or closed position
- Solid ball construction
- Blow-out proof stem
- 29 in-Hg vacuum rating
- Repair kits available
- Fire safe rated
- 100% leak tested
- Wetted surfaces contain less than .25% lead content

VALVE SEAT RATINGS

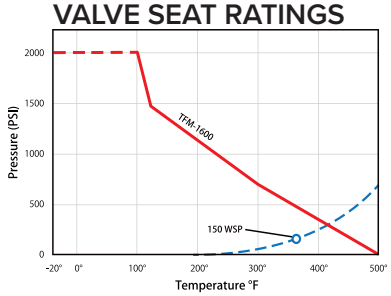

PART NUMBER	SIZE	A	B	C	D	E
601-623	1/2"	2.72	2.47	4.15	0.43	0.38
601-624	3/4"	2.94	2.70	4.15	0.55	0.50
601-625	1"	3.50	3.19	5.00	0.81	0.50
601-626	1-1/4"	3.90	3.64	5.98	0.98	0.50
601-627	1-1/2"	4.42	3.88	7.76	1.25	0.50
601-628	2"	5.04	4.09	7.76	1.50	0.62

T-SS-2002N-DUE

LISTED LEAD FREE

5 PIECE • FULL PORT • DOUBLE UNION END • THREADED CONNECTION • 3000 WOG

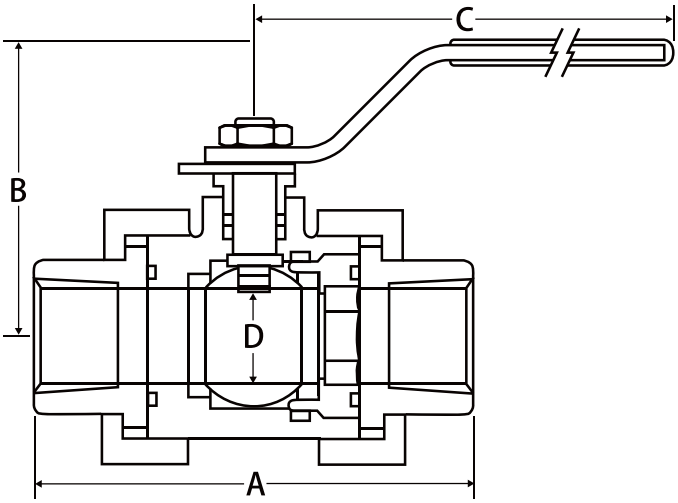

- Solid ball construction
- 5 piece construction
- Mounting pad
- Reversible handle
- Latch lock handle available
- Adjustable stem packing with blow-out proof stem
- 29 in-Hg vacuum rating
- Repair kits available
- 100% leak tested
- Wetted surfaces contain less than .25% lead content

VALVE SEAT RATINGS

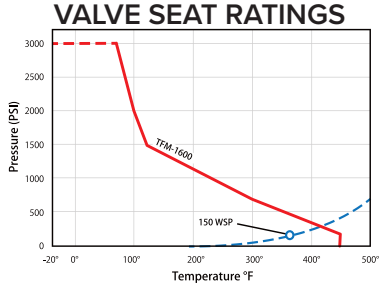

PART NUMBER	SIZE	A	B	C	D	TORQUE
100-993	1/2"	3.58	2.40	4.17	0.62	65
100-994	3/4"	3.74	2.79	6.97	0.81	100
100-995	1"	4.29	2.96	6.97	1.00	120
100-996	1-1/4"	4.61	3.38	9.84	1.25	210
100-997	1-1/2"	5.24	3.67	9.84	1.50	300
100-998	2"	5.71	4.52	12.24	1.97	400

S-SS-2002N-DUE

LEAD FREE

5 PIECE • FULL PORT • DOUBLE UNION END • SOCKET WELD • 3000 WOG

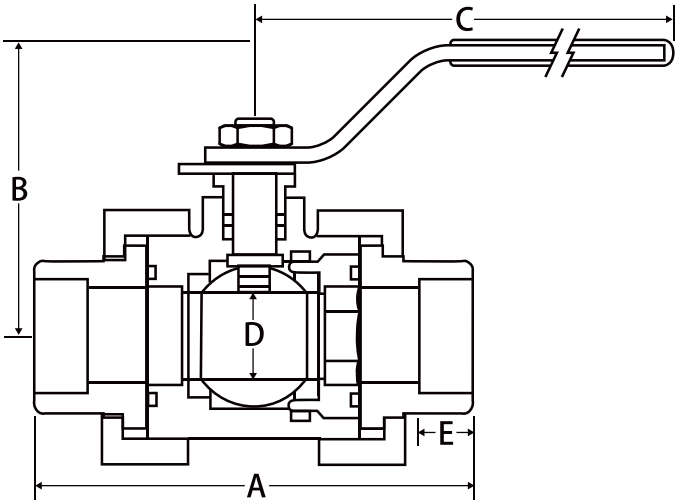

- Solid ball construction
- 5 piece construction
- Mounting pad
- Reversible handle
- Latch lock handle available
- Adjustable stem packing with blow-out proof stem
- 29 in-Hg vacuum rating
- Repair kits available
- 100% leak tested
- Wetted surfaces contain less than .25% lead content

VALVE SEAT RATINGS

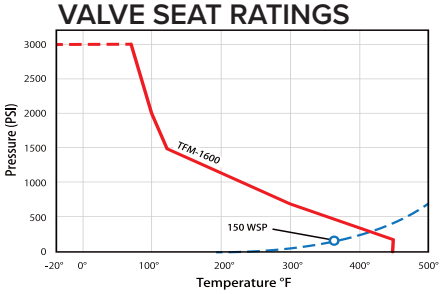

PART NUMBER	SIZE	A	B	C	D	E	TORQUE
101-983	1/2"	3.58	2.40	4.17	0.62	0.44	65
101-984	3/4"	3.74	2.79	6.97	0.81	0.56	100
101-985	1"	4.29	2.96	6.97	1.00	0.72	120
101-986	1-1/4"	4.61	3.38	9.84	1.25	0.72	210
101-987	1-1/2"	5.24	3.67	9.84	1.50	0.72	300
101-988	2"	5.71	4.52	12.24	1.97	0.84	400

T-SS-1000

LEAD FREE

1 PIECE / 2 PIECE • FULL PORT • THREADED CONNECTION • 1000 WOG

1/8" FIP X 1/8" MIP

1/4" FIP X 1/4" MIP

1/4" FIP X 1/4" FIP

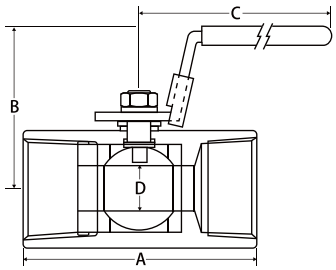

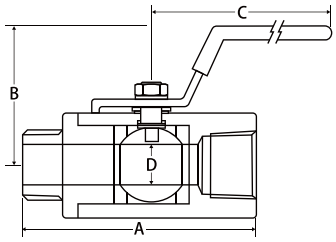

- Solid ball construction
- Corrosion resistant
- 29 in-Hg vacuum rating
- 100% leak tested
- Wetted surfaces contain less than .25% lead content

VALVE SEAT RATINGS

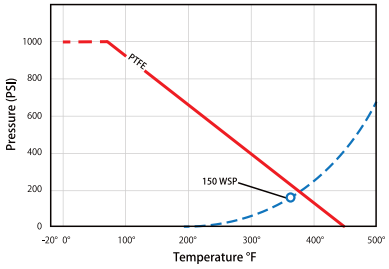

PART NUMBER	SIZE	A	B	C	D
500-098	1/8" FIP X 1/8" MIP	2.00	1.22	2.44	0.20
500-099	1/4" FIP X 1/4" MIP	2.32	1.50	3.45	0.30
500-101	1/4" FIP X 1/4" FIP	1.57	1.42	3.45	0.20

© 2025 JOMAR VALVE | P: 586.268.1220 | F: 586.979.8615 | JOMARVALVE.COM

FL-SS-100-150

LEAD FREE

2 PIECE • FULL PORT • STAINLESS STEEL • FLANGED CONNECTION • CLASS 150

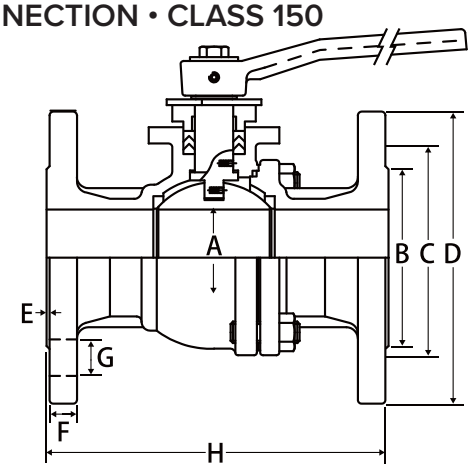

- Wrench operator
- Fire safe stem and body graphite seals
- Air tested seat leakage: 85 PSI
- Hydraulic tested body: 427 PSI
- Locking device comes standard
- Repair kits available
- 100% leak tested
- Wetted surfaces contain less than .25% lead content

VALVE SEAT RATINGS

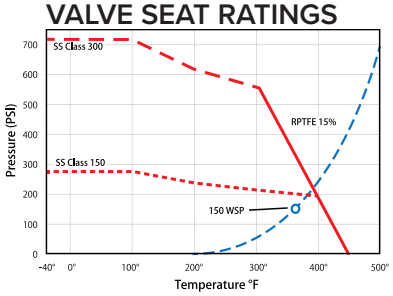

PART NUMBER	SIZE	A	B	C	D	E	F	G	H	BOLTS	TORQUE
600-103	1/2"	0.63	1.38	2.38	3.50	0.06	0.44	0.63	4.25	4	48
600-104	3/4"	0.79	1.69	2.76	3.86	0.06	0.44	0.63	4.61	4	90
600-105	1"	0.98	2.01	3.13	4.25	0.06	0.44	0.63	5.00	4	148
600-107	1-1/2"	1.50	2.87	3.88	5.00	0.06	0.56	0.63	6.50	4	270
600-108	2"	1.97	3.62	4.74	5.98	0.06	0.63	0.75	7.01	4	395
600-109	2-1/2"	2.56	4.13	5.49	7.01	0.06	0.69	0.75	7.48	4	609
600-110	3"	3.15	5.00	6.00	7.48	0.06	0.75	0.75	7.99	4	913
600-111	4"	3.94	6.18	7.50	9.02	0.06	0.94	0.75	9.02	8	1443
600-112	6"	5.98	8.50	9.51	10.98	0.06	1.00	0.87	15.51	8	4870
600-113*	8"	7.99	10.63	11.75	13.50	0.06	1.12	0.87	17.99	8	8522
600-114*	10"	9.84	12.76	14.25	15.98	0.06	1.19	0.98	20.98	12	-
600-115*	12"	11.81	12.52	17.01	19.02	0.06	1.25	0.98	24.02	12	-

* 8"-12" SPECIAL ORDER

FL-SS-100-300

LEAD FREE

2 PIECE • FULL PORT • STAINLESS STEEL • FLANGED CONNECTION • CLASS 300

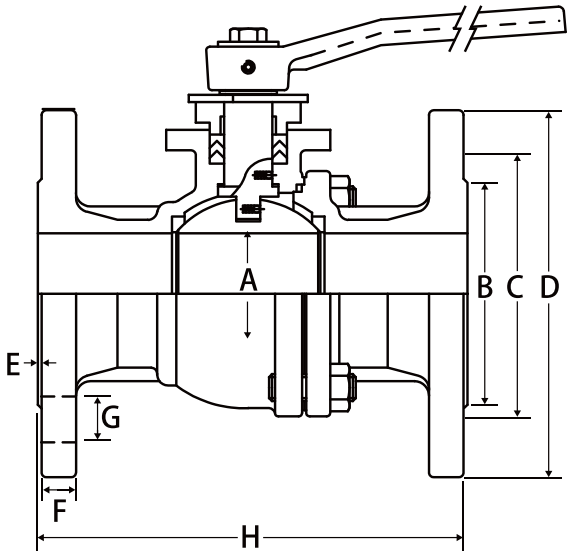

- Wrench operator
- Fire safe stem and body graphite seals
- Air tested seat leakage: 85 PSI
- Hydraulic tested body: 1124 PSI
- Locking device comes standard
- Repair kits available
- 100% leak tested
- Wetted surfaces contain less than .25% lead content

VALVE SEAT RATINGS

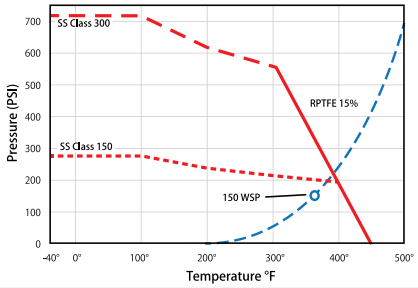

PART NUMBER	SIZE	A	B	C	D	E	F	G	H	BOLTS	TORQUE
600-128	2"	1.97	3.62	5.00	6.50	0.06	0.88	0.75	8.50	8	1068
600-130	3"	3.15	5.00	6.62	8.27	0.06	1.17	0.88	11.10	8	1752
600-131	4"	3.94	6.19	7.88	10.00	0.06	1.25	0.88	12.00	8	3216
600-132	6"	5.90	8.51	10.64	12.53	0.06	1.44	0.88	15.88	12	6900
600-133*	8"	7.88	10.64	13.00	15.01	0.06	1.62	1.00	19.75	12	16620

* 8" SPECIAL ORDER

BFV-LUG

NSF CERTIFIED LEAD FREE

LUG STYLE • EPOXY-COATED DUCTILE IRON BODY • STAINLESS STEEL DISC

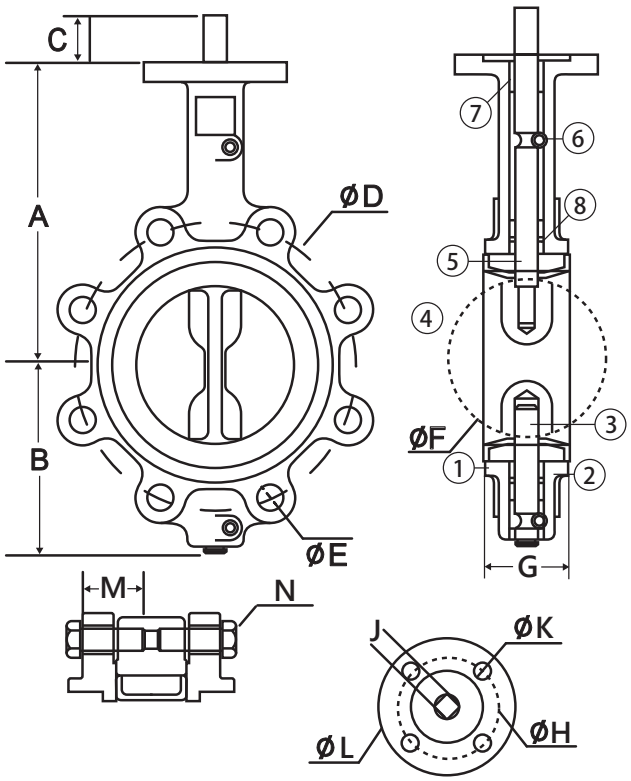

- Epoxy coated finish
- Square stem for direct mount
- Bidirectional for dead end service
- Available in EPDM, PTFE, Buna-N, or Viton® seats
- Ideal for mounting pneumatic/electrical actuators
- Easily accepts actuator with ISO 5211 mounting flange
- Seat-to-flange seal eliminates the need for flange gaskets
- Designed for commercial and industrial applications up to 225 PSI
- Wetted surfaces contain less than .25% lead content

SEAT TEMPERATURE RANGES	SIZE	BUNA-N	EPDM	VITON®	PTFE
TEMPERATURE RANGE (°F)	2" - 36"	10 TO 180	-30 TO 250	10 TO 275	-20 TO 250
INLINE SERVICE (PSI)	2" - 12"	200	200	200	200
	14" - 36"	150	150	150	150
DEAD END SERVICE W/DOWN STREAM FLANGE (PSI)	2" - 12"	200	200	200	100
DEAD END SERVICE W/O DOWN STREAM FLANGE (PSI)	2" - 12"	100	100	100	50

PART NUMBER	SIZE	A	B	C	D	E	F	G	H	J	K	L	M	N	WEIGHT
600-02DS_L	2"	6.34	3.15	1.26	4.74	4 : 5/8"	2.07	1.65	1.97	0.35	4 : 0.28	3.03	1.50	5/8-11UNC	8.38
600-212DS_L	2-1/2"	6.89	3.50	1.26	5.50	4 : 5/8"	2.54	1.77	1.97	0.35	4 : 0.28	3.03	1.50	5/8-11UNC	9.26
600-03DS_L	3"	7.13	3.74	1.26	6.00	4 : 5/8"	3.10	1.77	1.97	0.35	4 : 0.28	3.03	1.50	5/8-11UNC	10.36
600-04DS_L	4"	7.87	4.49	1.26	7.50	8 : 5/8"	4.09	2.03	2.76	0.43	4 : 0.35	3.54	1.75	5/8-11UNC	19.84
600-05DS_L	5"	8.39	5.00	1.26	8.50	8 : 3/4"	4.85	2.17	2.76	0.55	4 : 0.35	3.54	1.75	3/4-10UNC	24.03
600-06DS_L	6"	8.90	5.47	1.26	9.51	8 : 3/4"	6.13	2.17	2.76	0.55	4 : 0.35	3.54	2.00	3/4-10UNC	31.31
600-08DS_B	8"	10.24	6.89	1.61	11.75	8 : 3/4"	7.97	2.36	4.02	0.67	4 : 0.47	4.92	2.00	3/4-10UNC	40.12
600-10DS_B	10"	11.50	7.99	1.61	14.25	12 : 7/8"	9.86	2.64	4.02	0.87	4 : 0.47	4.92	2.25	7/8-9UNC	59.08
600-12DS_B	12"	13.27	9.53	1.61	17.01	12 : 7/8"	11.87	2.97	4.02	0.87	4 : 0.47	5.51	2.50	7/8-9UNC	88.18
600-14DS_G	14"	14.49	10.55	1.77	18.74	12 : 1"	13.12	2.97	4.02	0.87	4 : 0.47	5.51	2.50	1-8UNC	123.46
600-16DS_G	16"	15.75	12.17	2.02	21.26	16 : 1"	15.34	4.02	5.51	1.06	4 : 0.71	7.76	3.00	1-8UNC	211.64
600-18DS_G	18"	16.54	12.91	2.02	22.76	16 : 1-1/8"	17.34	4.49	5.51	1.06	4 : 0.71	7.76	3.50	1-1/8-7UNC	268.96
600-20DS_G	20"	18.90	14.21	2.53	25.00	20 : 1-1/8"	19.35	5.00	5.51	1.42	4 : 0.71	7.76	4.00	1-1/8-7UNC	445.33
600-24DS_G	24"	22.13	18.07	2.76	29.51	20 : 1-1/4"	23.33	5.94	6.50	1.42	4 : 0.91	10.87	4.50	1-1/4-7UNC	595.25
600-30DS_G	30"	25.98	21.22	-	-	-	29.30	-	-	-	-	-	-	-	939.17
600-36DS_G	36"	28.35	25.83	-	-	-	34.04	-	-	-	-	-	-	-	1604.96

*U-type Butterfly Valve, dimensions and drawings available upon request.

Please specify the seat in the _ space with the following letter designations:	E = EPDM	P = PTFE	V = VITON®	B = BUNA
Please specify the handle with the following letter designations:	L = LEVER HANDLE	B = BARE STEM	G = GEAR OPERATOR	-

© 2025 JOMAR VALVE | P: 586.268.1220 | F: 586.979.8615 | JOMARVALVE.COM

BFV-WAFER

NSF CERTIFIED LEAD FREE

WAFER STYLE • EPOXY-COATED DUCTILE IRON BODY • STAINLESS STEEL DISC

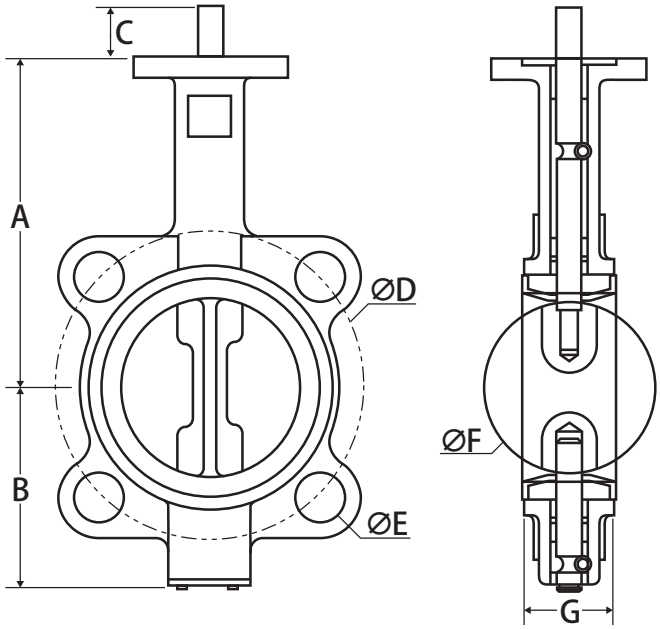

- Designed for commercial and industrial applications up to 225 PSI
- Easily accepts actuator with ISO 5211 mounting flange
- Available in EPDM, PTFE, Buna-N, or Viton® seats
- Meets API 609 & MSS SP-67
- Seat to flange seal eliminates the need for flange gaskets
- Epoxy coated finish
- Ideal for mounting pneumatic/electrical actuators
- Square stem for direct mount
- Wetted surfaces contain less than .25% lead content

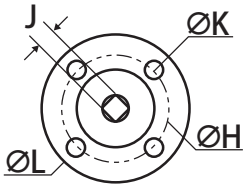

SEAT TEMPERATURE RANGES	SIZE	BUNA-N	EPDM	VITON®	PTFE
TEMPERATURE RANGE (°F)	2" - 36"	10 TO 180	-30 TO 250	10 TO 275	-20 TO 250
INLINE SERVICE (PSI)	2" - 12"	200	200	200	200
	14" - 36"	150	150	150	150

PART NUMBER	SIZE	A	B	C	D	E	F	G	H	J	K	L	WEIGHT
900-02DS_L	2"	6.34	3.15	1.26	4.74	4 : 0.75	2.07	1.65	1.97	0.35	4 : 0.28	3.03	5.51
900-212DS_L	2-1/2"	6.89	3.50	1.26	5.50	4 : 0.75	2.54	1.77	1.97	0.35	4 : 0.28	3.03	7.05
900-03DS_L	3"	7.13	3.74	1.26	6.00	4 : 0.75	3.10	1.77	1.97	0.35	4 : 0.28	3.03	8.38
900-04DS_L	4"	7.87	4.49	1.26	7.50	8 : 0.75	4.09	2.03	2.76	0.43	4 : 0.35	3.54	10.80
900-05DS_L	5"	8.39	5.00	1.26	8.50	8 : 0.87	4.85	2.17	2.76	0.55	4 : 0.35	3.54	15.43
900-06DS_L	6"	8.90	5.47	1.26	9.51	8 : 0.87	6.13	2.17	2.76	0.55	4 : 0.35	3.54	17.20
900-08DS_B	8"	10.24	6.89	1.61	11.75	8 : 0.87	7.97	2.36	4.02	0.67	4 : 0.47	4.92	29.10
900-10DS_B	10"	11.50	7.99	1.61	14.25	12 : 0.98	9.86	2.64	4.02	0.87	4 : 0.47	4.92	42.33
900-12DS_B	12"	13.27	9.53	1.61	17.01	12 : 0.98	11.87	2.97	4.02	0.87	4 : 0.47	5.51	71.65
900-14DS_G	14"	14.49	10.51	1.77	18.74	12 : 1.14	13.12	2.97	4.02	0.87	4 : 0.47	5.51	91.05
900-16DS_G	16"	15.75	12.17	2.02	21.26	16 : 1.14	15.34	4.02	5.51	1.06	4 : 0.71	7.76	134.48
900-18DS_G	18"	16.61	12.91	2.02	22.76	16 : 1.26	17.34	4.49	5.51	1.06	4 : 0.71	7.76	174.16
900-20DS_G	20"	18.90	14.21	2.53	25.00	20 : 1.26	19.35	5.00	5.51	1.42	4 : 0.71	7.76	282.19
900-24DS_G	24"	22.13	18.07	2.76	29.51	20 : 1.38	23.33	5.94	6.50	1.42	4 : 0.91	10.87	414.47
900-30DS_G	30"	25.98	21.22	2.60	36.00	28 : 1.38	29.30	-	10.00	-*	8 : 0.71	11.81	723.12
900-36DS_G	36"	28.35	25.83	4.65	41.34	32 : 1.61	34.04	-	10.00	-*	8 : 0.71	11.81	1571.89

*Stem is round with key, dimensions and drawings available upon request.

Please specify the seat in the _ space with the following letter designations:	E = EPDM	P = PTFE	V = VITON®	B = BUNA
Please specify the handle with the following letter designations:	L = LEVER HANDLE	B = BARE STEM	G = GEAR OPERATOR	-

LEVER HANDLE
FITS RESILIENT SEATED BUTTERFLY VALVES, TEN POSITION, LOCKABLE

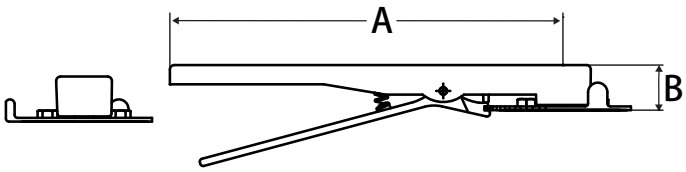

PART NUMBER	SIZE	A	B
BLH2-3	2" - 3"	10.51	1.18
BLH4	4"	10.51	1.18
BLH5-6	5" - 6"	10.51	1.18
BLH8	8"	14.06	0.98
BLH10	10"	14.06	0.98
BLH12	12"	14.06	0.98

GEAR OPERATOR HANDLE
FITS RESILIENT SEATED BUTTERFLY VALVES

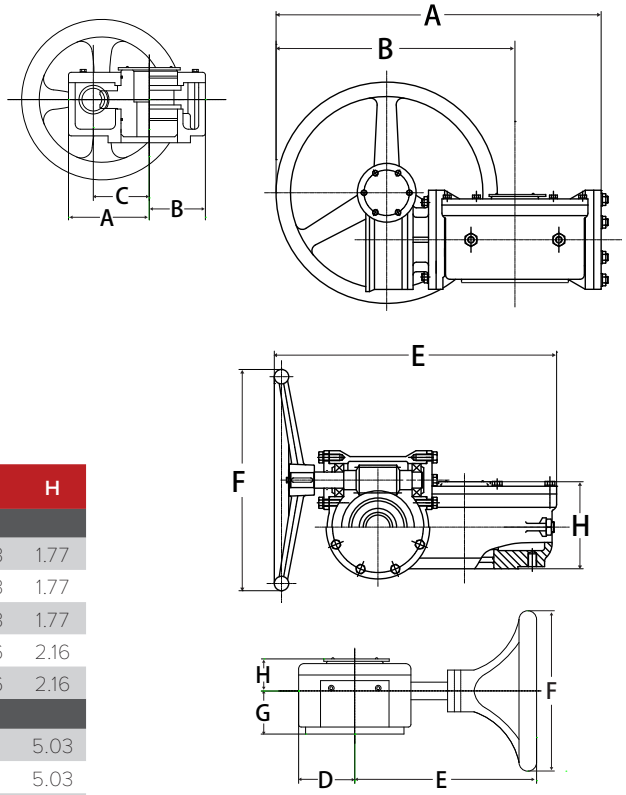

PART NUMBER	SIZE	A	B	C	D	E	F	G	H
2"-14"									
BGO2-3	2"-3"	4.72	2.01	1.77	2.01	6.06	5.90	1.53	1.77
BGO4	4"	4.72	2.01	1.77	2.01	6.06	5.90	1.53	1.77
BGO5-6	5"-6"	4.72	2.01	1.77	2.01	6.06	5.90	1.53	1.77
BGO8	8"	7.99	2.79	2.60	2.79	8.82	11.22	1.46	2.16
BGO10	10"	7.99	2.79	2.60	2.79	8.82	11.22	1.46	2.16
16"-36"									
BGO16-18	16"-18"	16.53	12.28	-	-	14.37	11.22	-	5.03
BGO20	20"	16.53	12.28	-	-	14.37	11.22	-	5.03
BGO24	24"	20.47	15.27	-	-	16.38	15.16	-	5.51
BGO30	30"	23.42	17.44	-	-	19.01	16.73	-	5.87
BGO36	36"	29.88	19.37	-	-	23.62	16.73	-	7.28

© 2025 JOMAR VALVE | P: 586.268.1220 | F: 586.979.8615 | JOMARVALVE.COM

HPBFV CLASS 150

LUG STYLE • CARBON OR STAINLESS STEEL BODY • STAINLESS STEEL DISC AND STEM

HPBFV-CS-150

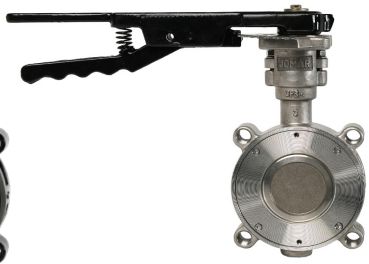

HPBFV-SS-150

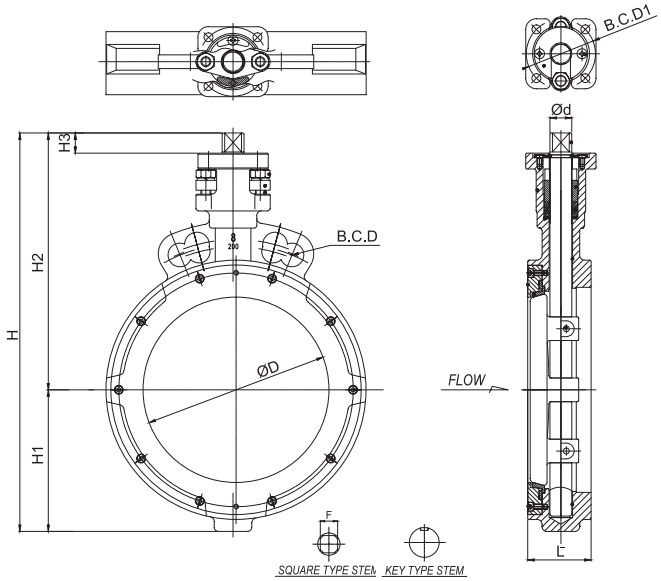

Basic Design: API 609, MSS-SP-68, BS 5155, ISO 5752
Pressure / Temp Rating : ANSI B16.34
Shell/Seat Test: API 598, MSS-SP-61

- Bubble-tight shut-off design
- Dual offset disc design
- Seat available in either RTFE or Metal
- One-piece stem in A564 Gr.630 / PH 17-4
- ISO 5211 mounting pad with a square shaft for 2"-12"
- Key type connection ranging from 14"-24"
- Excellent corrosion resistance via a one-piece body material of either cast or stainless steel
- Tight gland packing flange to prevent uneven load distribution against packing
- Internal stop design to prevent the disc from overtravelling, minimizing possible seat damage
- Heavy duty handle and 10 position notch plate on the valve disc for precise angle stops

PTFE & RPTFE Seat

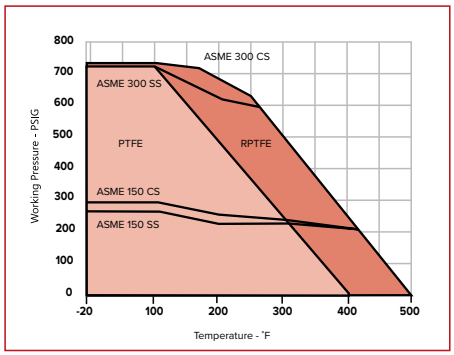

Metal Seat, Class 150

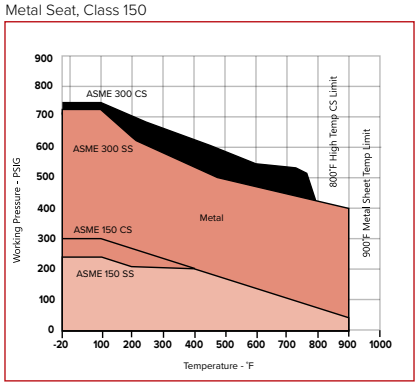

CS PART NUMBER	SS PART NUMBER	SIZE	H	H1	H2	H3	Ød	F	ØD	E	L	B.C.D	N	H
600-02H1CSRL	600-02H1SSRL	2”	8.63	2.36	6.27	0.60	0.51	0.43	1.65	F07	1.73	4.75	4	0.75
600-212H1CSRL	600-212H1SSRL	2-1/2”	9.54	2.76	6.78	0.60	0.63	0.55	2.40	F07	1.81	5.50	4	0.75
600-03H1CSRL	600-03H1SSRL	3”	9.85	3.01	6.84	0.60	0.63	0.55	2.91	F07	1.89	6.00	4	0.75
600-04H1CSRL	600-04H1SSRL	4”	11.07	3.54	7.53	0.70	0.63	0.55	3.70	F07	2.13	7.50	8	0.75
600-05H1CSRB	600-05H1SSRB	5”	12.55	4.09	8.45	0.70	0.71	0.55	4.65	F07	2.24	8.50	8	0.87
600-06H1CSRB	600-06H1SSRB	6”	13.62	4.53	9.09	0.75	0.87	0.67	5.51	F07	2.28	9.50	8	0.87
600-08H1CSRG	600-08H1SSRG	8”	15.91	5.65	10.26	0.81	0.87	0.67	7.40	F07	2.52	11.75	8	0.87
600-10H1CSRG	600-10H1SSRG	10”	18.44	6.69	11.75	0.81	1.10	0.87	9.39	F10	2.81	14.25	12	1.00
600-12H1CSRG	600-12H1SSRG	12”	20.63	7.76	12.88	0.95	1.10	0.87	11.02	F10	2.81	17.00	12	1.00
600-14H1CSRG	600-14H1SSRG	14”	26.87	11.00	15.87	2.76	1.50	-	-	F14	3.62	18.75	12	1.13
600-16H1CSRG	600-16H1SSRG	16”	31.66	12.54	19.12	3.48	1.77	-	-	F16	4.02	21.75	16	1.13
600-18H1CSRG	600-18H1SSRG	18”	33.73	13.31	20.41	3.48	2.17	-	-	F16	4.49	22.75	16	1.25
600-20H1CSRG	600-20H1SSRG	20”	34.59	14.17	20.41	3.48	2.17	-	-	F16	5.00	25.00	20	1.25
600-24H1CSRG	600-24H1SSRG	24”	39.76	16.70	23.05	3.68	2.56	-	-	F16	6.06	29.50	20	1.37

HPBFV CLASS 300

LUG STYLE • CARBON OR STAINLESS STEEL BODY • STAINLESS STEEL DISC AND STEM

HPBFV-CS-300

HPBFV-SS-300

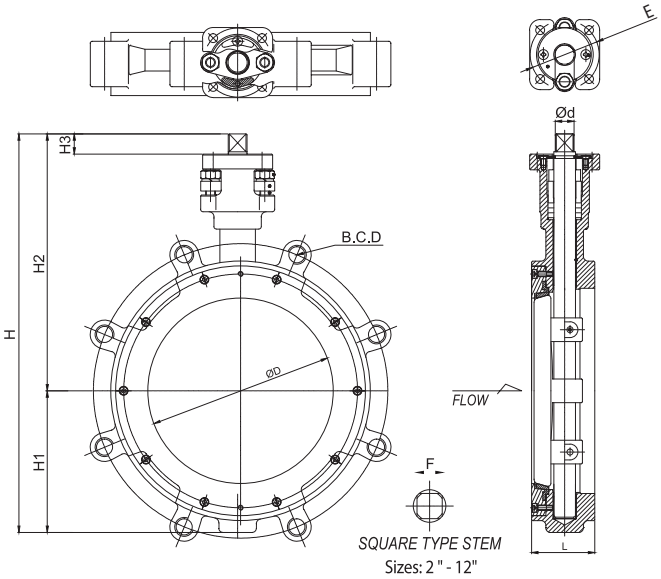

Basic Design: API 609, MSS-SP-68, BS 5155, ISO 5752
Pressure / Temp Rating : ANSI B16.34
Shell/Seat Test: API 598, MSS-SP-61

- Bubble-tight shut-off design
- Dual offset disc design
- Durable one-piece stem in A564 Gr.630 / PH 17-4
- ISO 5211 mounting pad with a square shaft for 2"-12"
- Excellent corrosion resistance via a one-piece body material of either cast or stainless steel
- Tight gland packing flange to prevent uneven load distribution against packing
- Internal stop design to prevent the disc from overtravelling, minimizing possible seat damage
- Heavy duty handle and 10 position notch plate on the valve disc for precise angle stops

PTFE & RPTFE Seat

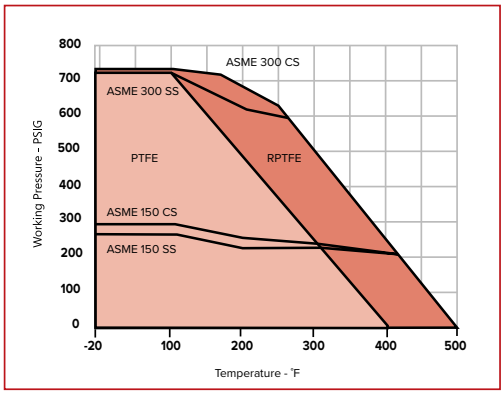

CS PART NUMBER	SS PART NUMBER	SIZE	H	H1	H2	H3	Ød	F	ØD	E	L	B.C.D	N*	H*	BOLT SIZE
600-02H3CSRL	600-02H3SSRL	2"	8.63	2.36	6.27	0.60	0.51	0.43	1.65	F07	1.73	5.00	8	0.75	5/8" X 1-1/2"
600-212H3CSRL	600-212H3SSRL	2-1/2"	9.54	2.76	6.77	0.60	0.63	0.55	2.40	F07	1.81	5.87	8	0.87	3/4" X 1-3/4"
600-03H3CSRL	600-03H3SSRL	3"	9.85	3.01	6.84	0.60	0.63	0.55	2.91	F07	1.89	6.63	8	0.87	3/4" X 1-3/4"
600-04H3CSRL	600-04H3SSRL	4"	11.07	3.54	7.53	0.70	0.63	0.55	3.70	F07	2.13	7.87	8	0.87	3/4" X 2-1/4"
600-02H3CSRG	600-02H3SSRG	2"	8.63	2.36	6.27	0.60	0.51	0.43	1.65	F07	1.73	5.00	8	0.75	5/8" X 1-1/2"
600-212H3CSRG	600-212H3SSRG	2-1/2"	9.54	2.76	6.77	0.60	0.63	0.55	2.40	F07	1.81	5.87	8	0.87	3/4" X 1-3/4"
600-03H3CSRG	600-03H3SSRG	3"	9.85	3.01	6.84	0.60	0.63	0.55	2.91	F07	1.89	6.63	8	0.87	3/4" X 1-3/4"
600-04H3CSRG	600-04H3SSRG	4"	11.07	3.54	7.53	0.70	0.63	0.55	3.70	F07	2.13	7.87	8	0.87	3/4" X 2-1/4"
600-05H3CSRG	600-05H3SSRG	5"	12.55	4.09	8.45	0.70	0.71	0.55	4.65	F07	2.24	9.25	8	0.87	3/4" X 2-1/4"
600-06H3CSRG	600-06H3SSRG	6"	13.62	4.53	9.09	0.75	0.91	0.67	5.51	F07	2.28	10.63	12	0.87	3/4" X 2-1/2"
600-08H3CSRG	600-08H3SSRG	8"	15.91	5.65	10.26	0.81	1.10	0.87	7.40	F10	2.87	13.00	12	1.00	7/8" X 2-7/8"
600-10H3CSRG	600-10H3SSRG	10"	18.44	6.69	11.75	0.81	1.10	0.87	9.39	F10	3.25	15.25	16	1.13	7/8" X 3-1/4"
600-12H3CSRG	600-12H3SSRG	12"	20.71	7.83	12.88	0.95	1.10	0.87	11.02	F10	3.62	17.75	16	1.25	1-1/8" X 3-1/2"

N* = number of bolts
H* = bolt hole diameter

© 2025 JOMAR VALVE | P: 586.268.1220 | F: 586.979.8615 | JOMARVALVE.COM

HPBFV LEVER HANDLE

FITS HIGH PERFORMANCE BUTTERFLY VALVES, TEN-POSITION, LOCKABLE

PART NUMBER	SIZE
HPBFV 150 CLASS	
HPLH2	2"
HPLH2.5-5	2-1/2", 3", 4", 5"
HPLH6	6"
HPBFV 300 CLASS	
HPLH2	2"
HPLH2.5-5	2-1/2", 3", 4"

HPBFV LEVER HANDLE

FITS HIGH PERFORMANCE BUTTERFLY VALVES, STAINLESS STEEL, TEN-POSITION, LOCKABLE

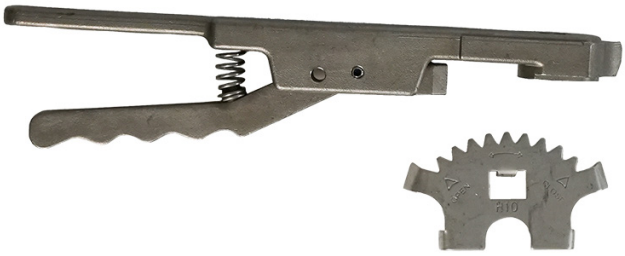

PART NUMBER	SIZE
HPBFV CLASS 150	
HPLH2SS	2"
HPLH2.5-5SS	2-1/2", 3", 4", 5"
HPLH6SS	6"
HPBFV CLASS 300	
HPLH2SS	2"
HPLH2.5-5SS	2-1/2", 3", 4"

HPBFV GEAR OPERATOR

FITS HIGH PERFORMANCE BUTTERFLY VALVES

PART NUMBER	SIZE
HPBFV CLASS 150	
HPBGO2	2"
HPBGO2.5-5	2.5"-5"
HPBGO6-8	6"-8"
HPBGO10	10"
HPBGO12	12"
HPBFG14	14"
HPBFG16	16"
HPBFGO18-24	18"-24"
HPBFV CLASS 300	
HPBFGO2	2"
HPBFGO2.5-5	2.5"-5"
HPBFGO6-8	6"-8"
HPBFGO10	10"
HPBFGO12	12"

T-301

BRASS GATE VALVE • NON-RISING STEM • THREADED CONNECTION • 200 WOG

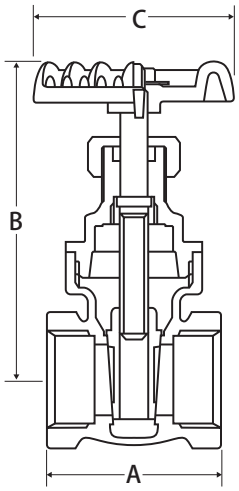

- Manufactured in ISO-9001 facility
- Solid wedge gate
- Residential and commercial applications

VALVE SEAT RATINGS

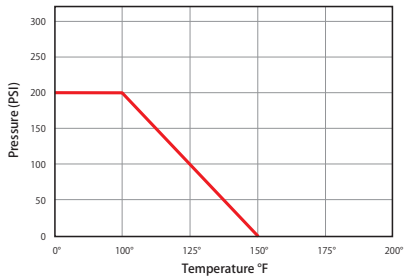

PART NUMBER	SIZE	A	B	C
100-303	1/2"	1.69	2.84	2.13
100-304	3/4"	1.85	3.31	2.13
100-305	1"	2.17	3.94	2.52
100-306	1-1/4"	2.40	4.57	2.75
100-307	1-1/2"	2.52	4.84	3.07
100-308	2"	2.83	5.90	3.54
100-309	2-1/2"	3.51	7.33	4.14
100-310	3"	3.98	8.75	5.12
100-311	4"	4.57	10.17	6.78

F-351

LEAD FREE

CAST IRON GATE VALVE • BOLTED BONNET • NON-RISING STEM • SOLID WEDGE • CLASS 125

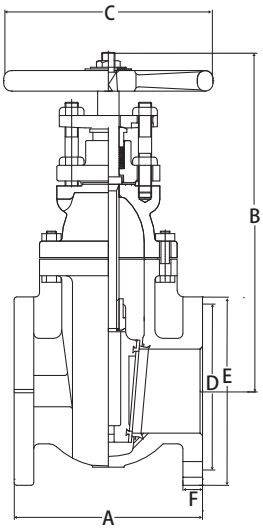

PART NUMBER	SIZE	A	B	C	D	E	F
103-525	2-1/2”	7.50	12.72	7.01	5.51	7.01	0.69
103-503	3”	8.00	13.31	7.87	6.00	7.48	0.76
103-504	4”	9.00	16.18	10.00	7.48	8.98	0.92
103-506	6”	10.50	21.97	11.81	9.48	10.98	1.00
103-508	8”	11.50	25.59	13.70	11.75	13.50	1.12

- Lead free compliant
- Conforms to MSS SP-70
- Flange: ANSI B16.1
- Face-to-Face: ANSI B16.10

Pressure Rating
- Class 125
- Suitable for 125 PSI WSP

© 2025 JOMAR VALVE | P: 586.268.1220 | F: 586.979.8615 | JOMARVALVE.COM

F-361 LEAD FREE

CAST IRON GATE VALVE • BOLTED BONNET • SOLID WEDGE • OS & Y • CLASS 125

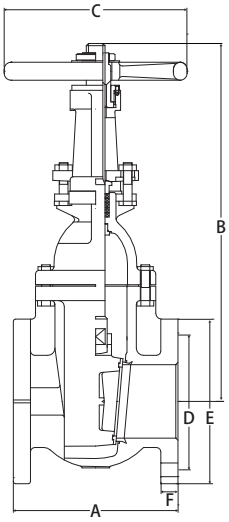

- Lead free compliant
- Conforms to MSS SP-70
- Flange: ANSI B16.1
- Face-to-Face: ANSI B16.10

Pressure Rating
- Class 125
- Suitable for 125 PSI WSP

PART NUMBER	SIZE	A	B	C	D	E	F
103-625	2-1/2”	7 .50	16.93	7.01	5.49	7.01	0.81
103-603	3”	8.00	19.09	7.87	6.00	7.52	0.88
103-604	4”	9.00	24.21	10.00	7.48	9.01	0.92
103-606	6”	10.50	32.88	11.82	9.51	10.98	1.00
103-608	8”	11.50	39.76	13.70	11.76	13.50	1.13
103-610	10”	13.00	48.03	15.75	14.25	15.98	1.19
103-612	12”	14.02	56.50	17.00	17.01	19.01	1.25

T-521G

LEAD FREE

LEAD FREE BRASS INLINE CHECK VALVE • THREADED CONNECTION • 300 WOG • CLASS 150

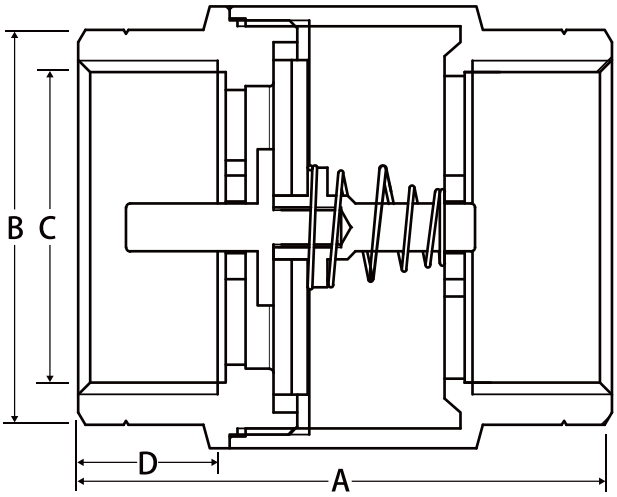

- Forged lead free brass body
- Bubble tight Teflon seal
- Wetted surfaces contain less than .25% lead content

Pressure/Temperature Rating
- 300 WOG
- Max 250°F

PART NUMBER	SIZE	A	B	C	D
105-603G	1/2”	1.28	1.91	0.5	0.49
105-604G	3/4”	1.54	2.06	0.75	0.59
105-605G	1”	1.77	2.3	1	0.59
105-606G	1-1/4”	2.17	2.64	1.25	0.73
105-607G	1-1/2”	2.34	2.74	1.5	0.71
105-608G	2”	3.15	3.31	2	0.83

T-511

BRONZE Y-PATTERN SWING CHECK VALVE • THREADED CONNECTION • 300 WOG • CLASS 150

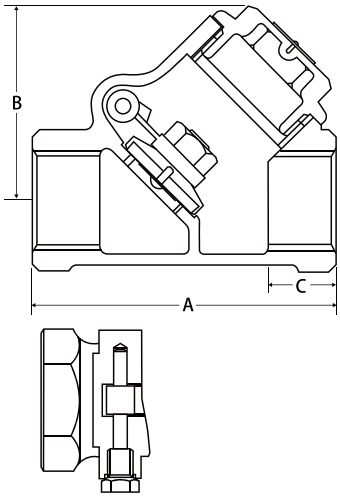

- Constructed of 85-5-5-5 bronze
- Can be installed in vertical or horizontal position

PART NUMBER	SIZE	A	B	C
105-303	1/2"	2.36	1.77	0.54
105-304	3/4"	2.76	1.97	0.57
105-305	1"	3.4	2.28	0.7
105-306	1-1/4"	3.78	2.67	0.71
105-307	1-1/2"	4.57	2.95	0.75
105-308	2"	5.35	3.7	0.79
105-309	2-1/2"	6.72	4.65	1.14
105-310	3"	7.55	5.47	1.18

© 2025 JOMAR VALVE | P: 586.268.1220 | F: 586.979.8615 | JOMARVALVE.COM

T-501

HORIZONTAL SWING CHECK VALVE • THREADED CONNECTION • 200 WOG

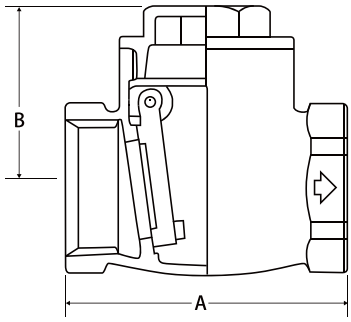

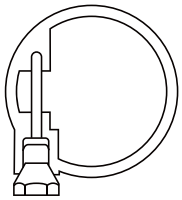

- Commercial and residential applications

Pressure Rating
- 200 WOG

PART NUMBER	SIZE	A	B
105-103	1/2"	2.13	1.54
105-104	3/4"	2.33	1.62
105-105	1"	2.72	1.77
105-106	1-1/4"	3.11	2.01
105-107	1-1/2"	3.51	2.25
105-108	2"	4.30	2.68
105-109	2-1/2"	5.32	3.35
105-110	3"	6.30	3.86
105-111	4"	7.49	4.53

T-550

STAINLESS STEEL SWING CHECK VALVE • THREADED CONNECTION • 200 WOG

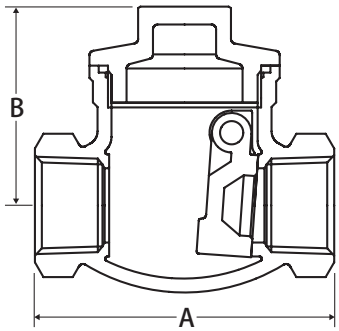

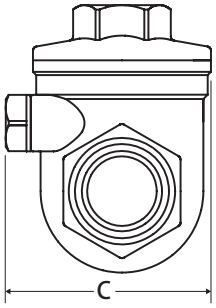

- Manufactured in ISO-9001 facility
- Heavy pattern body
- One-piece body design
- PTFE O-Ring seal
- Metal to metal disc seal

PART NUMBER	SIZE	A	B	C
105-803	1/2"	2.56	1.73	1.83
105-804	3/4"	3.15	2.05	2.05
105-80	1"	3.50	2.44	2.20
105-806	1-1/4"	4.13	2.64	2.56
105-807	1-1/2"	4.72	3.11	2.95
105-808	2"	5.47	3.15	3.31

F-571 LEAD FREE

HORIZONTAL SWING • BOLTED BONNET • CLASS 125

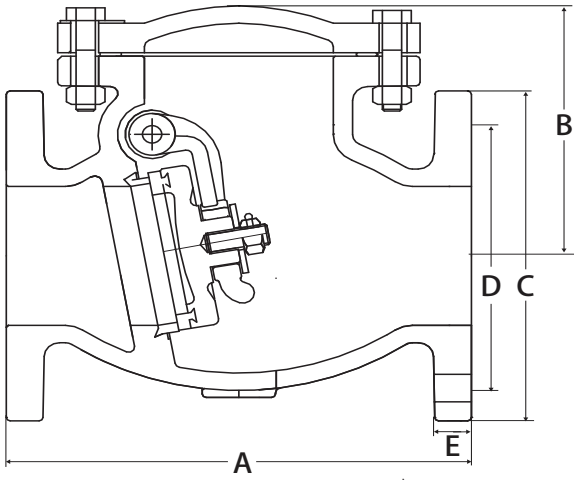

- Lead free compliant
- Conforms to MSS SP-71
- Flange: ASME B16.1
- Face-to-Face: ANSI B16.10

Pressure Rating
- Class 125
- Suitable for 125 PSI WSP

PART NUMBER	SIZE	A	B	C	D	E
105-725	2-1/2”	8.50	5.24	7.01	5.49	0.81
105-703	3”	9.50	5.67	7.52	6.00	0.88
105-704	4”	11.50	6.61	9.01	7.50	0.92
105-706	6”	14.00	8.54	10.98	9.51	1.00
105-708	8”	19.49	10.27	13.50	11.75	1.12
105-710	10”	24.49	11.30	15.98	14.25	1.19
105-712	12”	27.50	12.56	19.01	17.01	1.25

F-591 LEAD FREE

WAFER STYLE • DOUBLE DOOR • ALUMINUM BRONZE DISC • CLASS 125

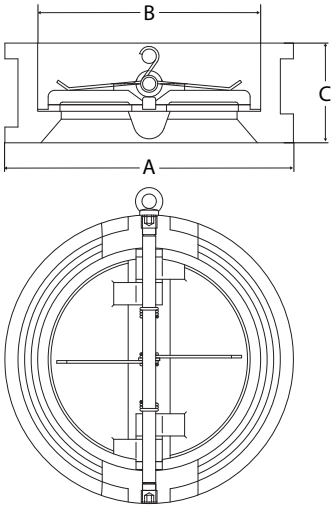

- Lead free compliant

Pressure Rating
- Class 125

PART NUMBER	SIZE	A	B	C	C_V
105-925	2-1/2”	4.88	3.15	2.17	120
105-903	3”	5.38	3.70	2.27	226
105-904	4”	6.88	4.61	2.52	404
105-906	6”	8.75	6.69	2.99	1075
105-908	8”	10.98	8.82	3.50	1920

© 2025 JOMAR VALVE | P: 586.268.1220 | F: 586.979.8615 | JOMARVALVE.COM

F-592

WAFER STYLE • DUAL-PLATE • STAINLESS STEEL DISC • CLASS 125

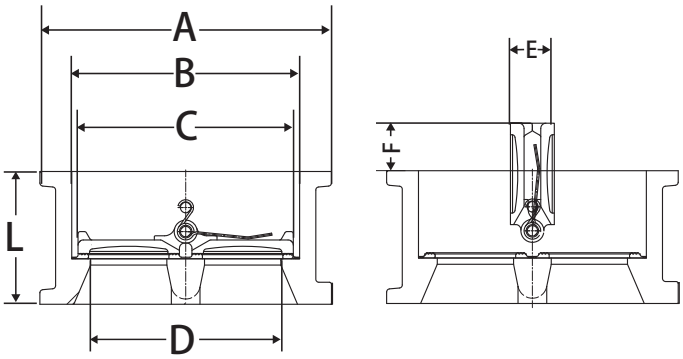

- Two torsion springs activate each set of valve plates
- Quick-close action prevents the medium flowing back
- Easy installation onto either vertical or horizontal pipeline

Pressure Rating
- Class 125

PART NUMBER	SIZE	ØA	ØB	ØC	ØD	L	E	F	WALL THICKNESS	C_V
105-525	2 1/2"	4.843	3.15	2.874	2.323	2.362	0.866	0.492	0.335	120
105-503	3"	5.315	3.701	3.386	2.756	2.638	1.024	0.472	0.413	226
105-504	4"	6.85	4.606	4.173	3.455	2.638	1.339	0.906	0.492	404
105-506	6"	8.701	6.693	6.181	5.276	3.74	1.496	1.594	0.571	1075
105-508	8"	10.984	8.583	8.11	7.165	5	1.654	1.791	0.61	1920
105-510	10"	13.346	10.433	9.921	8.661	5.512	2.126	2.598	0.728	3360
105-512	12"	16.102	12.205	11.65	10.236	7.126	2.362	2.52	0.787	5320

T-100FBG

CERTIFIED LEAD FREE

FULL PORT • THREADED CONNECTION • 400 WOG • INTEGRATED STRAINER

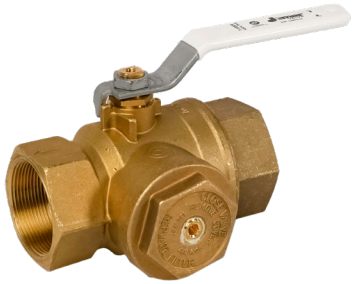

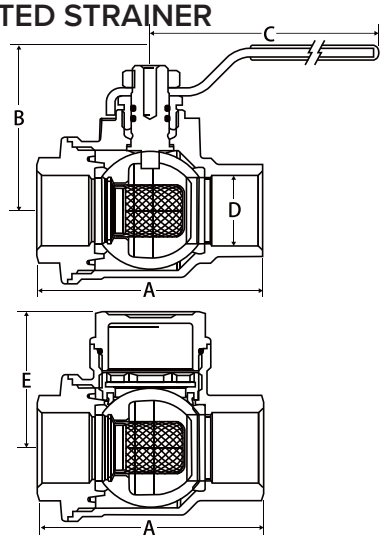

- Blow-out proof stem
- Corrosion resistant brass
- 100% leak tested
- 100% Made in Italy
- Reversible handle
- Leakproof stem - Lifetime Warranty
- Accessories available
- Triple sealing stem with 2 FKM O-Rings and Teflon® seal
- Shipped standard with 304 SS 28 mesh screen
- Available mesh screens: 40, 60, 80, 100

VALVE SEAT RATINGS

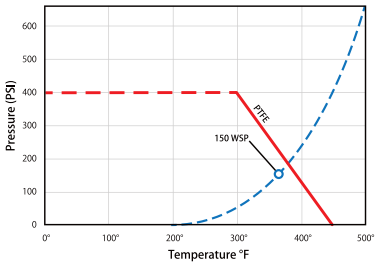

PART NUMBER	SIZE	A	B	C	D	E	CV
100-833G	1/2"	2.73	2.20	3.74	0.69	1.47	8.09
100-834G	3/4"	3.03	2.40	4.72	0.89	1.73	8.67
100-835G	1"	3.74	2.60	4.72	1.12	2.01	16.76
100-836G	1-1/4"	4.73	3.23	5.91	1.40	2.36	23.12
100-837G	1-1/2"	5.00	3.50	5.91	1.77	2.91	42.77
100-838G	2"	6.06	3.56	5.91	1.77	3.01	42.77

F-651

LEAD FREE

Y-STRAINER • BOLTED BONNET • STAINLESS STEEL SCREEN • CLASS 125

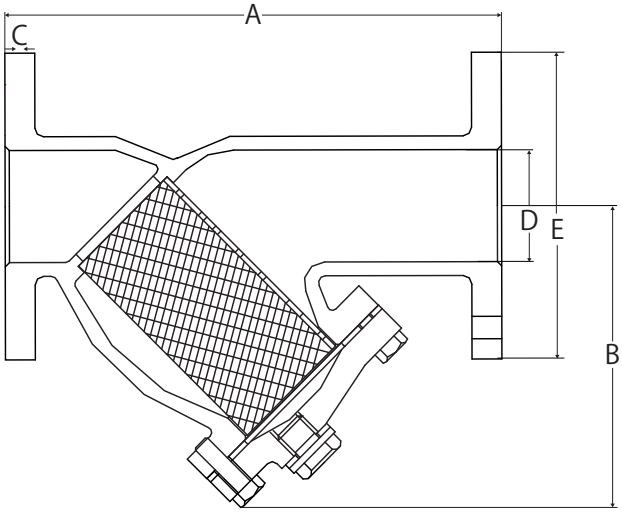

PART NUMBER	SIZE	A	B	C	D	E
106-625	2-1/2"	10.75	6.81	0.69	2.56	7.01
106-603	3"	11.50	7.68	0.75	3.15	7.52
106-604	3"	13.86	8.86	0.94	3.94	9.01
106-606	6"	18.50	12.91	1.00	5.90	10.98
106-608	8"	21.38	16.73	1.14	7.87	13.50

- Lead free compliant
- Flange: ANSI B16.1

Pressure Rating
- Class 125

© 2025 JOMAR VALVE | P: 586.268.1220 | F: 586.979.8615 | JOMARVALVE.COM

AE SERIES - 120VAC

DOUBLE ACTING • NEMA 4X • MANUAL OVERRIDE

Hard anodized aluminum housing with external powder coating for severe duty applications.

AE-1400

AE-350

AE-880

AE-180

AE-700

- 90˚ operation
- Enclosure: IP67 (Nema 4, 4X)
- ISO 5211 mounting
- Worm gearing, no brake required
- Manual override standard
- Squirrel cage induction motor
- Duty Cycle: 50%
- 4 Limit switches (2 for AE-180)
- 5W internal heater (AE-880 and larger)
- Terminal block for ease in wiring
- Position indicator
- Adjustable travel stops standard
- Torque switches for overload protection (except AE-180)
- Cable entries: M20 x 1.5 for AE-350 and AE-700, 3/4” NPT for all others
- Temperature range:
  AE-180: -22°F to 140°F
  AE-700 - AE-9700: -4°F to 158°F

MODEL	CSA	TORQUE IN - LB	SPEED 90 / 120VAC	OUTPUT SQ. ISO MOUNTING	PWR. RATING WATTAGE	INSULATION CLASS	WEIGHT IN - LB	LIMIT SWITCHES	CABLE ENTRY	INTERNAL HTR.	TERMINAL WIRING BLOCK	TORQUE OL PROTECTION
AE-180		180	15	.43/F03/F04/F05	6	E	2.64	2	PIGTAIL	NO	NO	N/A
AE-350		350	12	.55/F03/F05/F07	—	E	6.60	4	M20 X 1.5	YES	YES	N/A
AE-700		700	14	.67/F05/07	15	E	7.70	4	M20 X 1.5	YES	YES	N/A
AE-880	✓	880	18	.67/F07	15	F	15.40	4	3/4 NPT	YES	YES	N/A
AE-1400	✓	1400	22	.87/F07/10	40	F	33	4	3/4 NPT	YES	YES	YES
AE-2100	✓	2125	22	.87/F07/10	40	F	33	4	3/4 NPT	YES	YES	YES
AE-3100	✓	3098	26	1.06/F10/12	40	F	44	4	3/4 NPT	YES	YES	YES
AE-4400	✓	4425	26	1.06/F10/12/14	90	F	44	4	3/4 NPT	YES	YES	YES
AE-7000	✓	7080	32	1.42/F12/14	180	F	55	4	3/4 NPT	YES	YES	YES
AE-9700	✓	9735	32	1.54/F14	180	F	55	4	3/4 NPT	YES	YES	YES

AE SERIES - 24 VAC & 24 VDC

ELECTRIC ACTUATOR • DOUBLE ACTING NEMA 4X • MANUAL OVERRIDE

Hard anodized aluminum housing with external powder coating for severe duty applications.

AE-1400 - AE-9700

AE-700

AE-800

PART NUMBER	TORQUE	CYCLE TIME
AE-180-24VDC	180	12
AE-350-24VDC	350	12
AE-700-24VDC	700	12
AE-880-24VDC	880	18
AE-1400-24VDC	1400	33
AE-2100-24VDC	2125	33
AE-3100-24VDC	3098	37
AE-4400-24VDC	4425	34
AE-7000-24VDC	7080	39
AE-9700-24VDC	9735	39
AE-180-24VAC	180	12
AE-700-24VAC	700	14
AE-880-24VAC	880	26
AE-1400-24VAC	1400	26
AE-2100-24VAC	2125	26
AE-3100-24VAC	3098	31
AE-4400-24VAC	4425	31
AE-7000-24VAC	7080	39
AE-9700-24VAC	9735	39

- Temperature range:
  -4°F to 158°F - AE-350 and larger
  -22°F to 140°F - AE-180 90˚ operation
  Enclosure: IP67 (Nema 4, 4X)
- ISO 5211 mounting
- Worm gearing, no brake required
- Manual override standard
- Torque switches for overload protection (except for AE-180)
- Squirrel cage induction motor
- Duty Cycle: 50%
- 4 Limit switches (2 for AE-180)
- Cable entries: 3/4” NPT / M20 x 1.5
- 5W internal heater (AE-350 and larger)
- Terminal block for ease in wiring
- Position indicator
- Adjustable travel stops standard

JOMAR DOMESTIC ELECTRIC ACTUATORS

SPECIAL ORDER ONLY

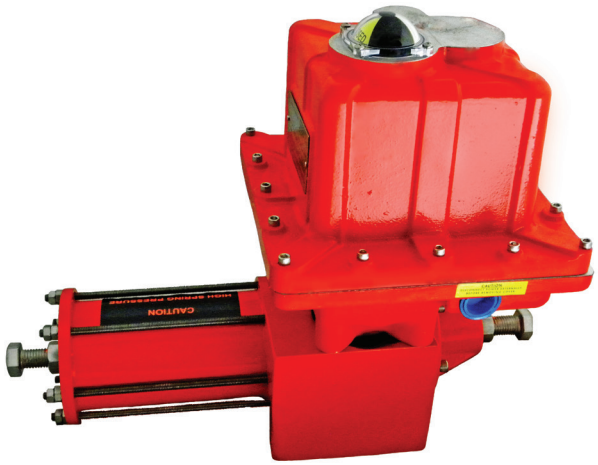

In addition to the AE Series, Jomar Valve also offers a wide range of specialty electric actuators tailored for your specific application. Jomar Valve offers you the following Made in America products:

- NEMA 4, 4x & 7 Enclosures
- Spring Return Electric Actuators
- 24, 115, 230, & 480 AC/ DC Voltages
- 100lbs-14000lbs Torque ranges
- Failsafe Battery Backup
- Other Actuator Accessories
- Jomar Valve can accommodate any application

© 2025 JOMAR VALVE | P: 586.268.1220 | F: 586.979.8615 | JOMARVALVE.COM

JV SERIES

SPRING RETURN AND DOUBLE ACTING ROTARY

The Jomar JV Series rotary pneumatic actuators are designed for use with quarter-turn ball, butterfly and plug valves as well as damper applications. The JV Series is designed for high-cycle applications and can be utilized in hazardous and corrosive environments.

DOUBLE ACTING/SPRING RETURN

WITH OPTIONAL SOLENOID VALVE

Back View

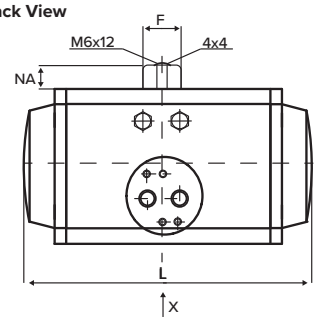

Air Connect
JV-50 - JV-200

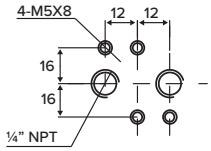

Air Connect
JV-240 - JV-300

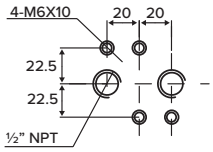

Left Side View

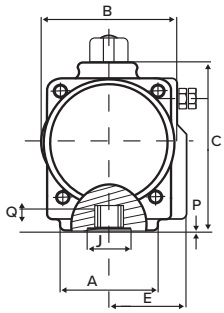

Bottom Mount

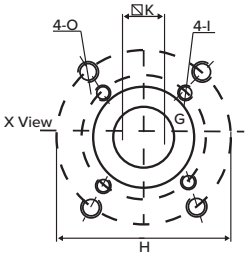

Top Mount

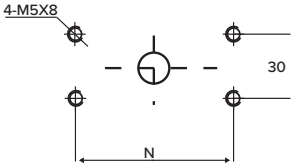

PART NUMBER	A	B	C	E	NA	F	G ISO	G DIA DIM	H ISO	H DIA DIM	I	J	K	L	N	O	P	Q	AIR CONNECTION
	DIMENSIONS																		
JV-50	2.05	2.28	2.76	1.61	0.79	1.57	F03	1.42	F05	1.97	M5X8	0.98	0.43	6.30	3.15	M6X10	0.04	0.47	1/4" NPT
JV-60	2.52	2.91	3.50	1.89	0.79	1.57	F05	1.97	F07	2.76	M6X10	1.10	0.55	7.56	3.15	M8X13	0.04	0.63	1/4" NPT
JV-70	2.68	3.35	3.94	2.05	0.79	1.57	F05	1.97	F07	2.76	M6X10	1.26	0.55	8.58	3.15	M8X13	0.04	0.63	1/4" NPT
JV-80	2.68	3.78	4.45	2.20	0.79	1.57	F05	1.97	F07	2.76	M6X10	1.42	0.67	9.37	3.15	M8X13	0.04	0.75	1/4" NPT
JV-90	3.74	4.21	4.84	2.56	0.79	1.57	F07	2.76	F10	4.02	M8X13	1.57	0.67	10.75	3.15	M10X16	0.04	0.75	1/4" NPT
JV-100	3.78	4.72	5.35	2.76	0.79	1.57	F07	2.76	F10	4.02	M8X13	1.57	0.87	10.79	3.15	M10X16	0.04	0.75	1/4" NPT
JV-120	3.78	5.43	6.34	3.15	0.79	2.28	F07	2.76	F10	4.02	M8X13	2.09	0.87	13.19	3.15	M10X16	0.06	0.94	1/4" NPT
JV-140	4.65	6.06	7.01	3.54	0.79	2.28	F10	4.02	F12	4.92	M10X16	2.09	1.06	14.57	5.12	M12X20	0.06	1.14	1/4" NPT
JV-160	4.65	6.93	7.87	4.06	0.79	2.28	F10	4.02	F12	4.92	M10X16	2.60	1.06	16.85	5.12	M12X20	0.06	1.14	1/4" NPT
JV-190	5.35	8.23	9.13	4.41	0.79	2.28	F10	4.02	F14	5.51	M10X16	3.07	1.42	19.21	5.12	M16X25	0.06	1.50	1/4" NPT
JV-200	5.51	9.09	10.04	4.80	1.18	3.15	-	-	F14	5.51	-	3.46	1.42	21.65	5.12	M16X25	0.06	1.50	1/4" NPT
JV-240	6.50	11.02	11.97	6.10	1.18	3.15	-	-	F16	6.50	-	3.94	1.81	23.54	5.12	M20X28	0.06	1.89	1/2" NPT
JV-270	6.50	11.97	12.99	6.57	1.18	3.15	-	-	F16	6.50	-	4.33	1.81	26.46	5.12	M20X28	0.08	1.89	1/2" NPT
JV-300	6.85	12.83	13.94	6.89	1.18	3.15	-	-	F16	6.50	-	4.92	1.81	30.87	5.12	M20X28	0.08	1.89	1/2" NPT

_= Must specify style: D = Double Acting, S = Spring Return

T-100 DIRECT MOUNT

BRASS • 2 PIECE • FULL PORT • THREADED CONNECTION • 600 WOG
ISO MOUNTING PAD

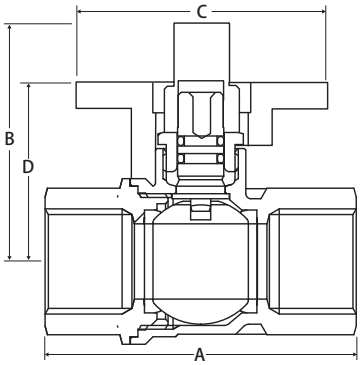

- Blow-out proof stem
- ISO 5211 mounting pad
- 100% leak tested
- Fits any T-100, S-100, or JP-100

T-100SSE									
PART NUMBER	BRACKET & COUPLER	SIZE	A	B	C	D	ISO	SQ	TORQUE (IN LBS)
100-501	A1B-A1C11	1/4"	1.86	1.77	1.97	1.26	F03/05	0.43	23
100-502	A1B-A1C11	3/8"	1.86	1.77	1.97	1.26	F03/05	0.43	23
100-503	A1B-A1C11	1/2"	2.45	1.95	1.97	1.50	F03/05	0.43	35
100-504	A2B-A2C11	3/4"	2.71	2.10	1.97	1.43	F03/04/05	0.43	62
100-505	A3B-A3C11	1"	3.30	2.63	1.97	2.12	F05	0.43	89
100-506	A3B-A3C11	1-1/4"	3.80	2.81	1.97	2.35	F05	0.43	132
100-507	A4B-A4C14	1-1/2"	4.16	2.84	2.79	2.44	F05/07	0.55	177
100-508	A4B-A4C14	2"	5.00	3.65	2.79	3.17	F05/07	0.55	222
100-509	FABRICATED	2-1/2"	6.06	FABRICATED					354
100-510	FABRICATED	3"	7.08	FABRICATED					442

T-100NE									
PART NUMBER	BRACKET & COUPLER	SIZE	A	B	C	D	ISO	SQ	TORQUE (IN LBS)
100-701	A1B-A1C11	1/4"	1.86	1.77	1.97	1.26	F03/F05	0.43	23
100-702	A1B-A1C11	3/8"	1.86	1.77	1.97	1.26	F03/F05	0.43	23
100-703	A1B-A1C11	1/2"	2.45	1.95	1.97	1.50	F03/F05	0.43	35
100-704	A2B-A2C11	3/4"	2.71	2.10	1.97	1.43	F03/F04/F05	0.43	62
100-705	A3B-A3C11	1"	3.30	2.63	1.97	2.12	F05	0.43	89
100-706	A3B-A3C11	1-1/4"	3.80	2.81	1.97	2.35	F05	0.43	132
100-707	A4B-A4C14	1-1/2"	4.16	2.84	2.79	2.44	F05/F07	0.55	177
100-708	A4B-A4C14	2"	5.00	3.65	2.79	3.17	F05/F07	0.55	222
100-709	FABRICATED	2-1/2"	6.06	FABRICATED					354
100-710	FABRICATED	3"	7.08	FABRICATED					442
100-711	FABRICATED	4"	8.57	FABRICATED					620

A101

CERTIFIED LEAD FREE

LEAD FREE BRASS • 2 PIECE • FULL PORT • THREADED CONNECTION • 600 WOG
ISO MOUNTING PAD • STAINLESS STEEL TRIM

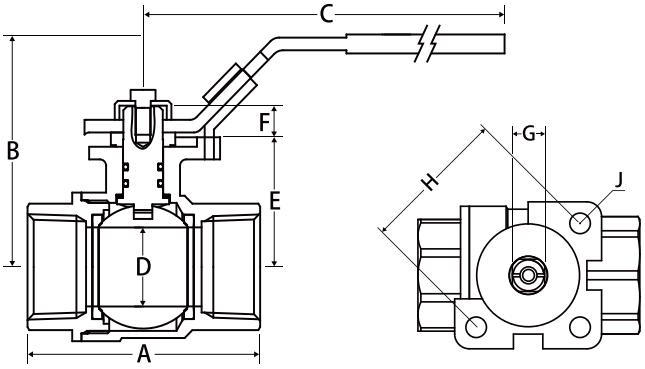

- Square valve stem for direct mounting to any ISO actuator
- Wetted surface contains less than .25% lead content
- Latch lock handle may be locked in open or closed position
- Dezincification resistant brass alloy
- ISO 5211 direct mounting pad
- Blow-out proof stem
- 100% leak tested

VALVE SEAT RATINGS

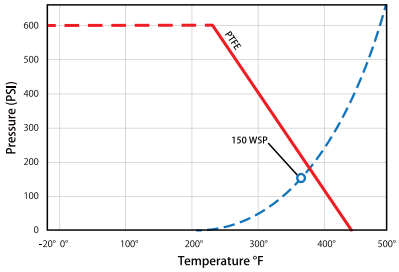

PART NUMBER	SIZE	A	B	C	D	E	F	G	H	J	ISO	TORQUE
A101-12	1/2"	2.39	2.34	4.76	0.59	1.14	0.37	0.35	1.42	0.23	F03	16
A101-34	3/4"	2.57	2.48	4.76	0.75	1.28	0.37	0.35	1.42	0.23	F03	23
A101-1	1"	2.97	2.85	6.73	0.98	1.59	0.39	0.43	1.97	0.28	F05	36
A101-114	1-1/4"	3.44	3.15	6.73	1.26	1.82	0.39	0.43	1.97	0.28	F05	73
A101-112	1-1/2"	3.88	3.64	6.73	1.57	2.32	0.43	0.43	1.97	0.28	F05	76
A101-2	2"	4.29	3.94	6.73	1.94	2.62	0.43	0.43	1.97	0.28	F05	130

© 2025 JOMAR VALVE | P: 586.268.1220 | F: 586.979.8615 | JOMARVALVE.COM

A101-DH

LEAD FREE BRASS • 2 PIECE • FULL PORT • THREADED CONNECTION • 600 WOG
STAINLESS STEEL TRIM WITH SPRING RETURN HANDLE

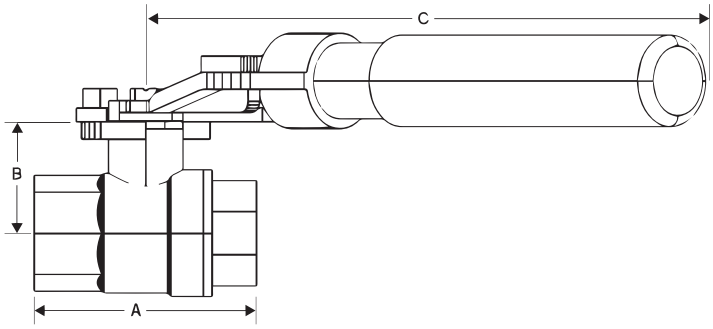

- Dezincification resistant brass alloy
- Blow-out proof stem
- Fail safe position
- Handle may be locked in the closed position
- 100% leak tested
- Wetted surface contains less than .25% lead content

VALVE SEAT RATINGS

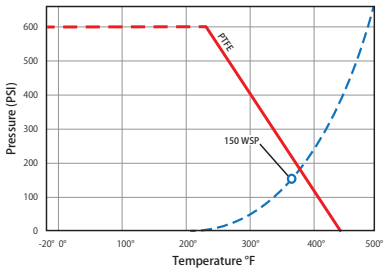

PART NUMBER	SIZE	A	B	C
A101-12DH	1/2"	2.39	1.14	6.69
A101-34DH	3/4"	2.57	1.28	6.69
A101-1DH	1"	2.97	1.59	8.66
A101-114DH	1-1/4"	3.44	1.82	8.66
A101-112DH	1-1/2"	3.88	2.32	8.66
A101-2DH	2"	4.29	2.62	8.66

A-751T/L

BRASS • 3-WAY • STANDARD PORT, T OR L PORT • THREADED CONNECTION • 400 WOG
ISO 5211 DIRECT MOUNTING PAD

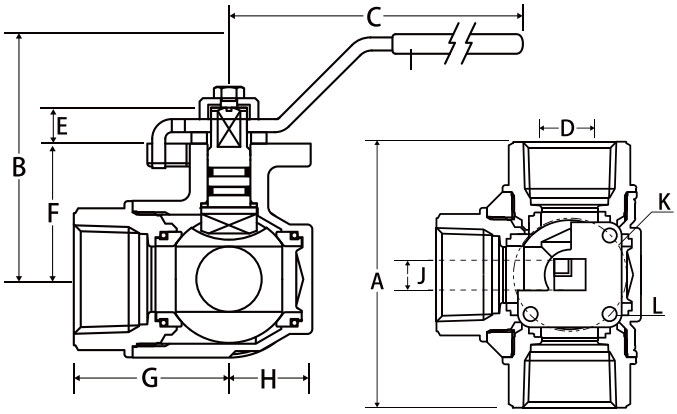

- ISO 5211 direct mounting pad
- Four seat design
- Temperatures to 344°F
- Blow-out proof stem
- Square valve stem for direct mounting to any ISO actuator

VALVE SEAT RATINGS

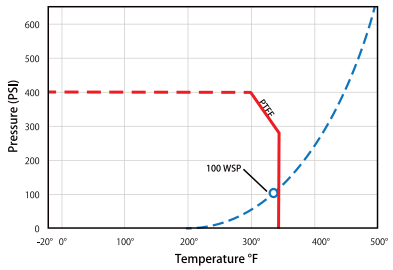

PART NUMBER	SIZE	A	B	C	D	E	F	G	H	J	K	L	TORQUE
A751_-14	1/4"	2.64	2.44	4.72	0.39	0.20	1.20	1.32	0.77	0.35	F03	0.23	54
A751_-38	3/8"	2.64	2.44	4.72	0.43	0.20	1.20	1.32	0.77	0.35	F03	0.23	54
A751_-12	1/2"	2.87	2.44	4.72	0.43	0.20	1.20	1.44	0.77	0.35	F03	0.23	54
A751_-34	3/4"	3.19	2.52	4.72	0.59	0.20	1.29	1.60	0.87	0.35	F03	0.23	54
A751_-1	1"	3.74	2.95	6.69	0.79	0.28	1.63	1.87	1.00	0.43	F05	0.27	151
A751_-114	1-1/4"	4.39	3.17	6.69	0.98	0.28	1.85	2.20	1.22	0.43	F05	0.27	151
A751_-112	1-1/2"	4.86	3.66	6.69	1.26	0.28	2.34	2.43	1.79	0.43	F05	0.27	151
A751_-2	2"	5.73	4.43	9.05	1.57	0.32	2.90	2.87	1.75	0.55	F07	0.35	275

_= Must specify ball: T = T-Port, L = L-Port

A1000

LEAD FREE

STAINLESS STEEL • 3 PIECE • 4 BOLT • FULL PORT • THREADED CONNECTION • 1000 WOG ISO MOUNTING PAD

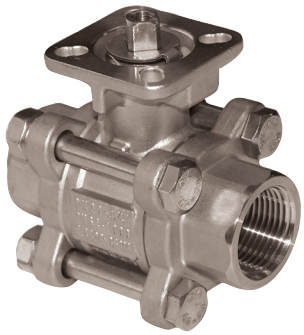

A1000 V-Ball
Available Separately

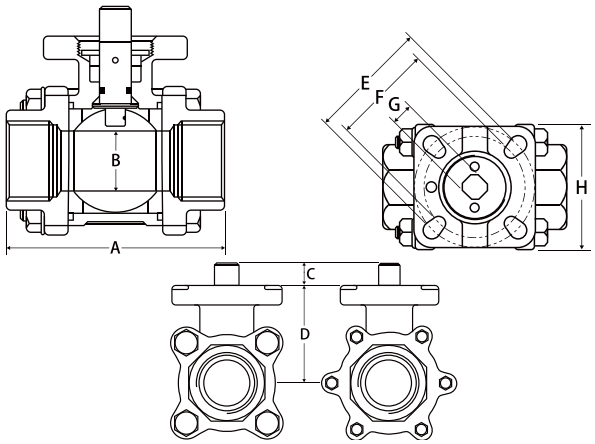

- Blow-out proof stem
- Adjustable stem packing
- ISO 5211 mounting pad
- 3 piece swing out body
- Wetted surfaces contain less than .25% lead content

VALVE SEAT RATINGS

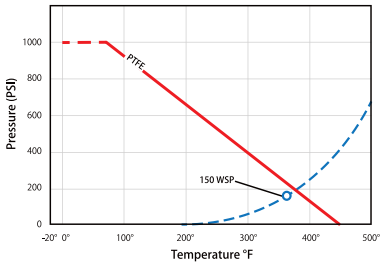

PART NUMBER	SIZE	A	B	C	D	E	F	G	H	TORQUE
A1000-14	1/4"	2.56	0.39	0.28	1.65	F04	F03	0.35	1.83	40
A1000-38	3/8"	2.56	0.39	0.28	1.65	F04	F03	0.35	1.83	40
A1000-12	1/2"	2.96	0.63	0.35	1.57	F04	F03	0.35	1.65	40
A1000-34	3/4"	3.15	0.88	0.35	1.73	F04	F03	0.35	1.65	60
A1000-1	1"	3.55	1.13	0.43	2.04	F05	F04	0.43	1.97	70
A1000-114	1-1/4"	4.33	1.38	0.43	2.28	F05	F04	0.43	1.97	110
A1000-112	1-1/2"	4.75	1.63	0.55	2.67	F07	F05	0.55	2.75	170
A1000-2	2"	5.52	1.97	0.55	3.00	F07	F05	0.55	2.75	250
A1000-212	2-1/2"	7.29	2.55	0.70	3.86	F10	F07	0.67	4.01	650
A1000-3	3"	8.00	3.00	0.70	4.33	F10	F07	0.67	4.01	850
A1000-4	4"	9.50	3.93	0.94	4.96	F12	F10	0.86	4.92	950

A1001

LEAD FREE

STAINLESS STEEL • 2 PIECE • FULL PORT • THREADED CONNECTION • 1000 WOG ISO MOUNTING PAD

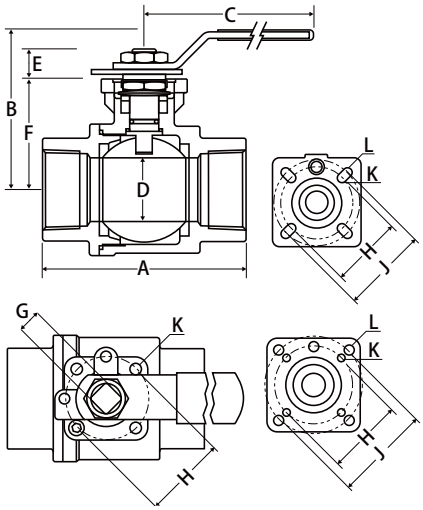

- ISO 5211 direct mounting pad
- Blow-out proof stem
- 100 % leak tested
- Wetted surface contains less than .25% lead content
- Locking device may be locked in open or closed position

VALVE SEAT RATINGS

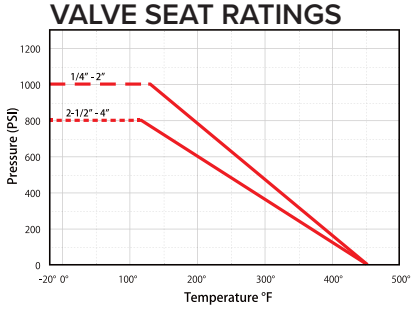

PART NUMBER	SIZE	A	B	C	D	E	F	G	H	J	K	L	TORQUE
A1001-14	1/4"	2.22	2.60	5.12	0.43	0.35	1.46	0.35	F03	F04	0.24	0.24	53
A1001-38	3/8"	2.22	2.60	5.12	0.49	0.35	1.46	0.35	F03	F04	0.24	0.24	53
A1001-12	1/2"	2.32	2.60	5.12	0.59	0.35	1.46	0.35	F03	F04	0.24	0.24	61
A1001-34	3/4"	2.81	2.72	5.12	0.79	0.43	1.57	0.35	F03	F04	0.24	0.24	79
A1001-1	1"	3.13	3.15	6.30	0.98	0.55	1.89	0.43	F04	F05	0.24	0.28	97
A1001-114	1-1/4"	3.62	3.35	6.30	1.26	0.55	2.11	0.43	F04	F05	0.24	0.28	123
A1001-112	1-1/2"	4.11	3.86	8.07	1.50	0.71	2.50	0.55	F05	-	0.28	-	256
A1001-2	2"	4.86	4.17	8.07	1.97	0.71	2.83	0.55	F05	-	0.28	-	327

NOTE: INFORMATION SUBJECT TO CHANGE WITHOUT NOTICE 11122025 © 2025 JOMAR VALVE | P: 586.268.1220 | F: 586.979.8615 | JOMARVALVE.COM

A2020D

LEAD FREE

STAINLESS STEEL • 2 PIECE • FULL PORT • FLANGED CONNECTION • CLASS 150 • ISO MOUNTING PAD

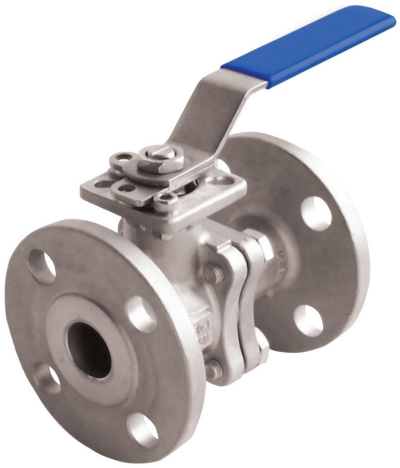

A2020D V-Ball
Available Separately

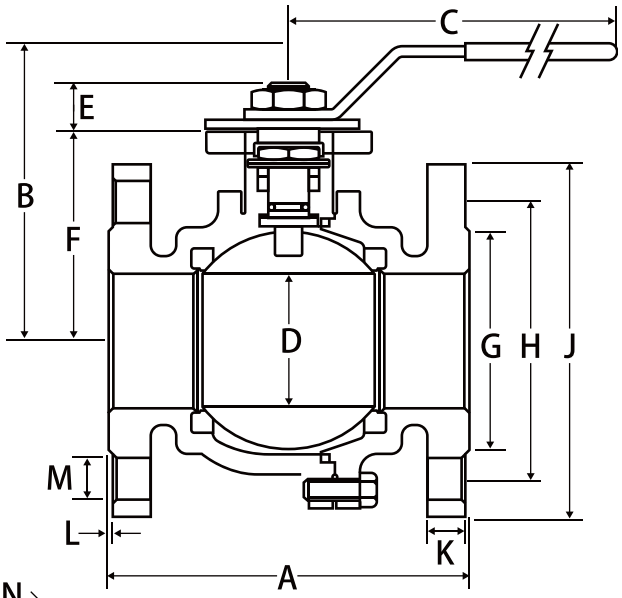

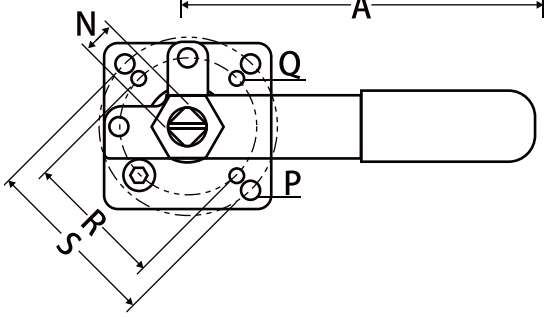

- ISO 5211 direct mounting pad
- Blow-out proof stem
- Locking device comes standard
- 100% leak tested
- Wetted surfaces contain less than .25% lead content

VALVE SEAT RATINGS

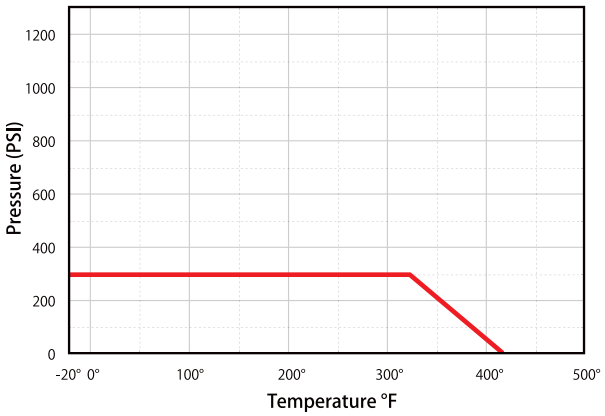

PART NUMBER	SIZE	DIMENSIONS A	B	C	D	E	F	G	H	J	K	L	M	N	P	Q	R	S	BOLTS	TORQUE
A2020D-12	1/2"	4.25	3.15	5.12	0.59	0.43	1.89	1.38	2.38	3.50	0.45	0.06	0.63	0.35	0.24	0.24	1.42	1.65	4	63.7
A2020D-34	3/4"	4.61	3.15	5.12	0.79	0.43	2.09	1.69	2.76	3.86	0.45	0.06	0.63	0.35	0.24	0.24	1.42	1.65	4	83.2
A2020D-1	1"	5.00	3.54	6.50	0.98	0.55	2.32	2.01	3.13	4.25	0.45	0.06	0.63	0.43	0.28	0.24	1.65	1.97	4	117
A2020D-114	1-1/4"	5.51	4.02	6.50	1.26	0.55	2.80	2.52	3.50	4.61	0.50	0.06	0.63	0.43	0.28	0.24	1.65	1.97	4	161
A2020D-112	1-1/2"	6.50	4.33	8.07	1.50	0.71	2.99	2.87	3.88	5.00	0.56	0.06	0.63	0.55	0.36	0.28	1.97	2.76	4	266
A2020D-2	2"	7.01	4.72	8.07	1.97	0.71	3.35	3.62	4.74	5.98	0.63	0.06	0.75	0.55	0.36	0.28	1.97	2.76	4	319
A2020D-212	2-1/2"	7.48	5.51	11.81	2.56	0.91	3.68	4.13	5.49	7.01	0.70	0.06	0.75	0.67	0.45	0.36	2.76	4.02	4	841
A2020D-3	3"	7.99	5.91	13.39	3.15	0.91	4.06	5.00	6.00	7.48	0.75	0.06	0.75	0.67	0.45	0.36	2.76	4.02	4	1170
A2020D-4	4"	9.02	7.09	16.54	3.94	0.98	5.20	6.18	7.50	9.02	0.94	0.06	0.75	0.87	0.53	0.45	4.02	4.92	8	2170

A-850T/L

LEAD FREE

STAINLESS STEEL • 3-WAY • FULL PORT • THREADED CONNECTION • 1000 WOG • ISO MOUNTING PAD

- ISO 5211 mounting pad
- Self adjusting stem packing
- Blow-out proof stem design
- Temperature range: -20˚F to 450˚F
- Four seat standard
- Locking device may be locked in open or closed position
- 100% tested
- Wetted surface contains less than .25% lead content

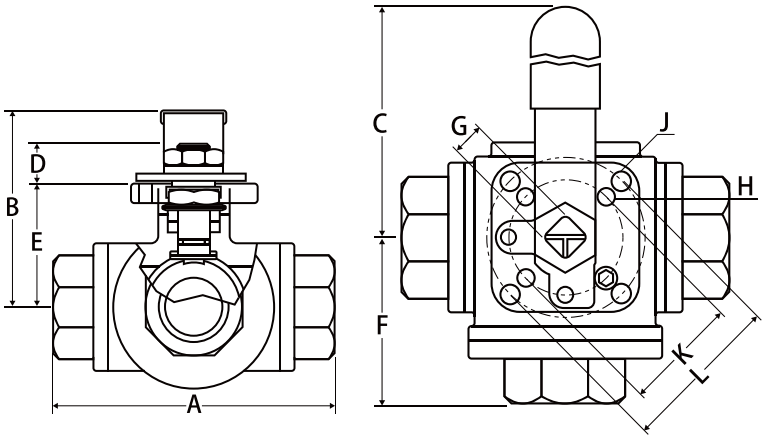

VALVE SEAT RATINGS

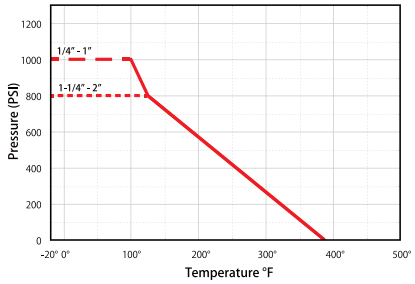

PART NUMBER	SIZE	A	B	C	D	E	F	G	H	J	K	L	PORT	TORQUE
A850_-14	1/4"	2.83	2.44	5.12	0.37	1.46	1.38	0.35	0.24	0.24	1.42	1.65	0.43	107
A850_-38	3/8"	2.83	2.44	5.12	0.37	1.46	1.38	0.35	0.24	0.24	1.42	1.65	0.47	107
A850_-12	1/2"	3.33	2.52	5.12	0.43	1.65	1.59	0.35	0.24	0.24	1.42	1.65	0.59	133
A850_-34	3/4"	3.94	3.23	6.50	0.55	1.93	1.95	0.43	0.24	0.28	1.65	1.97	0.79	160
A850_-1	1"	4.45	3.50	6.50	0.55	2.17	2.22	0.43	0.24	0.28	1.65	1.97	0.98	293
A850_-114	1-1/4"	4.94	3.86	8.07	0.67	2.48	2.44	0.55	0.28	0.36	1.97	2.76	1.26	532
A850_-112	1-1/2"	5.91	4.25	8.07	0.63	2.91	2.89	0.55	0.28	0.36	1.97	2.76	1.50	664
A850_-2	2"	6.85	5.51	12.80	0.83	3.62	3.43	0.67	0.36	0.45	2.76	4.02	1.97	744

_= MUST SPECIFY BALL: T = T-PORT, L = L-PORT

FLOW PATTERNS FOR A751T/L • A766T/L • A850T/L

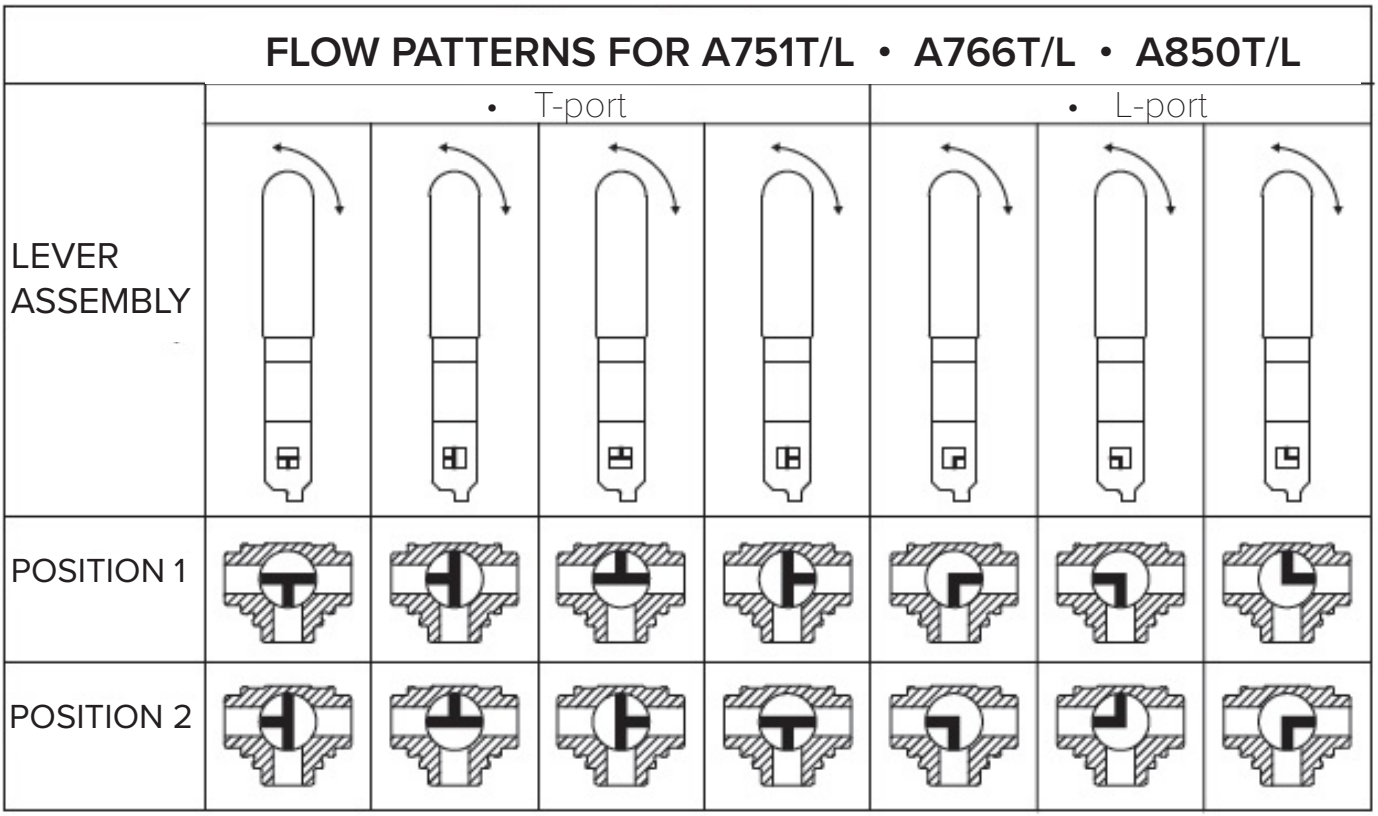

A-766T/L

LEAD FREE

STAINLESS STEEL • FULL PORT • 3-WAY FLANGED CONNECTION • CLASS 150

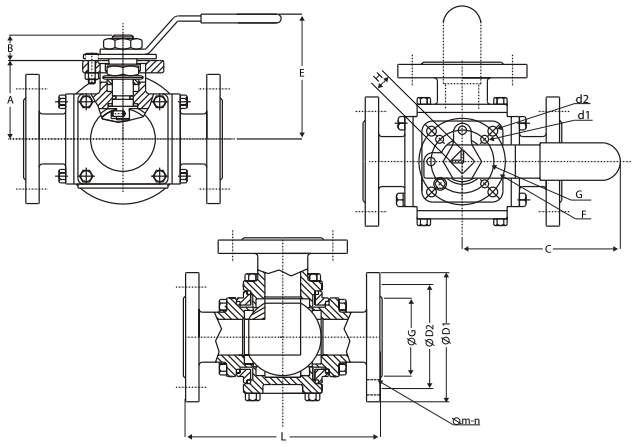

- Compact design
- AISI 316 stainless steel
- ANSI 150 flanged
- Max Temp 450˚F
- Blow-out proof stem
- 100% tested
- T-port & L-port available
- Wetted surface contains less than .25% lead content

VALVE SEAT RATINGS

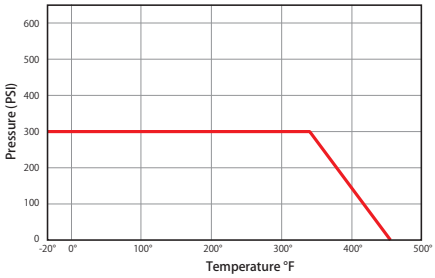

PART NUMBER	SIZE	A	B	C	D1	D2	D1	D2	E	F	G	H	L	M	N
A766T/L-1	1"	2.17	0.55	6.50	4.25	3.13	0.24	0.28	3.50	1.97	1.65	0.43	7.48	0.63	4
A766T/L-114	1-1/4"	2.48	0.67	8.07	4.61	3.50	0.28	0.36	3.86	2.76	1.97	0.55	8.19	0.63	4
A766T/L-112	1-1/2"	2.91	0.63	8.07	5.00	3.88	0.28	0.36	4.25	2.76	1.97	0.55	8.66	0.63	4
A766T/L-2	2"	3.66	0.83	12.80	5.98	4.74	0.36	0.45	5.51	4.02	2.76	0.67	9.96	0.63	4
A766T/L-212	2-1/2"	4.67	0.98	15.75	7.01	5.49	0.43	-	-	-	4.02	0.87	11.81	0.75	4
A766T/L-3	3"	5.37	0.98	19.69	7.48	6.00	0.43	-	-	-	4.02	0.87	12.01	0.75	4
A766T/L-4	4"	6.16	0.98	25.59	9.01	7.50	0.43	-	-	-	4.02	0.87	14.51	0.75	8

ASV-120
FOUR WAY SOLENOID VALVE

- Extruded aluminum body with NBR seal
- 120/60/1 coil with IP 67 rating
- Manual override
- 1/4" NPT Exhaust port
- 1/2" NPT conduit connection
- Operating Temp: -40˚F to 140˚F
- Operating Pressure: 20 to 120 PSI
  Options: 24 VAC, 240 VAC, 24 VDC, 120 VAC explosion proof

ASM-200
LIMIT SWITCH WITH DOME INDICATOR

- Die-cast aluminum, epoxy-polyester coated housing
- O-Ring sealed to prevent contaminants from entering switch compartment
- Position indicator manufactured of high-impact polycarbonate; yellow = open / red = closed
- Mechanical switches (2) are of SPDT design
- Eight position terminal strip included
- Enclosure is IP 67 weatherproof design
- Stainless steel mounting bracket made to NAMUR

AEP-100
ELECTRO-PNEUMATIC ROTARY POSITIONER

- Intended for use with either spring return or double acting pneumatic actuators to provide control of the actuator rotation utilizing an electrical control signal or control system.

- Aluminum housing construction
- Visual position indicator
- For use with 1/4-turn rotary actuators

FEATURE	MEASURE
ENCLOSURE	IP66
INPUT	4-20MA / 0-10 VDC
SUPPLY	20-100 PSI
IMPEDANCE	250 OHM ± 15 OHM
LINERARITY	±2% FS
OPERATING TEMPERATURE	-4°F TO 158°F
REPEATABILITY	±0.5% FS
HYSTERESIS	±1% FS
FLOW CAPACITY	80 LPM
AIR CONSUMPTION	3 LPM
WEIGHT	6.21 LB
ENCLOSURE	IP66
EXPLOSION PROOF APPROVAL	EXDII BT6
SIGNAL	1/2" CONDUIT
CONNECTIONS	1/4" AIR ; 1/8" GAUGE

© 2025 JOMAR VALVE | P: 586.268.1220 | F: 586.979.8615 | JOMARVALVE.COM

DIELECTRIC UNION
LEAD FREE BRASS FIP X GALVANIZED STEEL FIP CONNECTION • 250 PSI

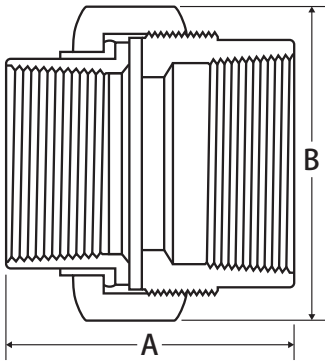

- Prevents accelerated corrosion
- Buna Seats: -20°F to 180°F
- Wetted surfaces contain less than .25% lead content

Pressure Rating
- 250 PSI

PART NUMBER	SIZE	A	B	C
701-503G	1/2" FIP X 1/2" FIP	2.14	1.61	0.72
701-504G	3/4" FIP X 3/4" FIP	2.21	1.83	0.72
701-505G	1" FIP X 1" FIP	2.54	2.58	0.85

DIELECTRIC UNION
GALVANIZED STEEL FIP X GALVANIZED STEEL FIP CONNECTION • 250 PSI

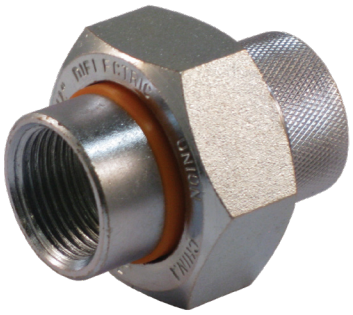

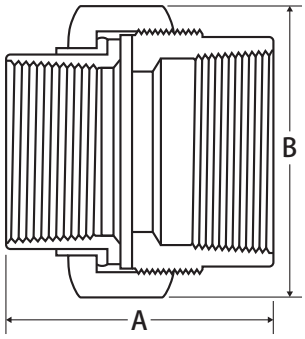

- Prevents accelerated corrosion
- Buna Seats: -20°F to 180°F

Pressure Rating
- 250 PSI

PART NUMBER	SIZE	A	B
701-413	1/2" FIP X 1/2" FIP	2.14	1.61
701-414	3/4" FIP X 3/4" FIP	2.21	1.83
701-415	1" FIP X 1" FIP	2.54	2.58
701-416	1-1/4" FIP X 1-1/4" FIP	2.73	2.96
701-417	1-1/2" FIP X 1-1/2" FIP	2.73	3.75
701-418	2" FIP X 2" FIP	3.12	4.30

DIELECTRIC UNION

BLACK IRON STEEL FIP X BLACK IRON STEEL FIP CONNECTION • 250 PSI

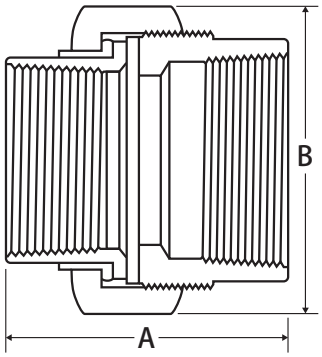

- Prevents accelerated corrosion
- For use on black pipe
- Buna seats: -20°F to 180°F

Pressure Rating
- 250 PSI

PART NUMBER	SIZE	A	B
701-403	1/2" FIP X 1/2" FIP	2.14	1.61
701-404	3/4" FIP X 3/4" FIP	2.21	1.83
701-405	1" FIP X 1" FIP	2.54	2.58
701-406	1-1/4" FIP X 1-1/4" FIP	2.73	2.96
701-407	1-1/2" FIP X 1-1/2" FIP	2.73	3.75
701-408	2" FIP X 2" FIP	3.12	4.30

© 2025 JOMAR VALVE | P: 586.268.1220 | F: 586.979.8615 | JOMARVALVE.COM

COMPARISON CHART

	WOG PLUS	HEAVYWEIGHT	GREEN STUFF	WHITE STUFF	COPPER ANTI-SEIZE	NICKEL ANTI-SEIZE
JC WHITLAM	STEEL-UNYTE	SELECT-UNYTE	T-U TYPE 555	SELECT-UNYTE	TALON COPPER	TALON NICKEL
BLUE MONSTER	-	BLUE MONSTER PTRE PIPE THREAD SEALANT	BLUE MONSTER THREAD SEALANT	BLUE MONSTER PTRE PIPE THREAD SEALANT	BLUE MON-STER COPPER ANTI-SEIZE LUBRI-CANT	BLUE MONSTER NICKEL ANTI-SEIZE
RECTORSEAL	TRU-BLU	T+2	#5, #5 SPECIAL, #5 SUB-ZERO	T+2	COPPER-RICH	NICKEL-RICH
FEDERAL PROCESS	GASOLIA HARD SET	GASOILA SOFT-SET THREAD SEALANT PTFE	GASOILA-NT	GASOILA SOFT-SET THREAD SEALANT PTFE	-	GASOLIA THRED GARD
HARVEY	-	TFE PASTE	YELLOW SEALANT	TFE PASTE	-	-
HERCULES	HERCULES GRRIP	REAL-TUFF	-	REAL-TUFF	-	-
OATEY	-	GREAT WHITE	OATEY GREAT BLUE	GREAT WHITE	-	-
IPS	-	WHITE SEAL	GREEN STUFF	WHITE SEAL	-	-

USES CHART

	WOG PLUS	HEAVYWEIGHT	GREEN STUFF	WHITE STUFF	COPPER ANTI-SEIZE	NICKEL ANTI-SEIZE
ACETYLENE					●	
ACIDS, DILUTED	●	●	●	●	●	
AIR, COMPRESSED GASEOUS	●	●	●	●	●	●
ALKALIS DILUTED	●	●	●	●	●	●
AMMONIA	●	●	●	●	●	●
ALIPHATIC SOLVENTS	●	●	●	●		
BRINE	●	●	●	●	●	●
BUTANE	●	●	●	●		
CARBON DIOXIDE	●	●	●	●	●	●
CASTOR OILS	●	●	●	●		
CHLORINATED WATER	●	●	●	●	●	
CORROSIVES		●		●	●	
COAL TAR NAPHTHA		●	●	●		
CUTTING OILS	●	●	●	●		
DIESEL FUEL OIL	●	●	●	●		
FATTY ACIDS (LIQUIDS)		●		●	●	
FREON (ALL)	●	●	●	●	●	●
GASOLINE*	●	●	●	●		
GASOHOL						
GLYCOL		●	●	●		
HEATING OILS	●	●	●	●		
HELIUM GASEOUS	●	●	●	●		
HYDRAULIC OILS	●	●	●	●		
HYDROGEN		●	●	●		
INERT GASES, GASEOUS	●	●	●	●	●	●
JET FUEL (JP 3,4,5)	●	●	●	●		
KEROSENE	●	●	●	●		
LACQUER	●	●	●	●		
LIQUEFIED PETROLEUM GASES	●	●	●	●		
MANUFACTURED GASES	●	●	●	●		
MINERAL OILS	●	●	●	●		
NAPHTHA	●	●		●		
NATURAL GAS	●	●	●	●	●	●
NITROGEN, GASEOUS	●	●	●	●	●	●
OXYGEN						
PETROLEUM SOLVENTS	●	●	●	●		
PROPANE	●	●	●	●		
REFRIGERATION GASES	●	●	●	●	●	●
SOAP, LIQUID	●	●	●	●	●	●
STEAM LINES	●	●	●	●	●	●
SUGAR, LIQUID	●	●	●	●	●	●
VEGETABLE OILS	●	●	●	●		
WATER (HOT OR COLD)	●	●	●	●	●	●
XYLOL	●	●		●		

*CONTACT JOMAR FOR COMPATIBLE BLENDS

The information contained in this bulletin is correct to the best of our knowledge. The recommendations or suggestions herein are made without guarantee or representation as to result, since the conditions of use are beyond our control. We suggest that you evaluate the recommendations contained in this bulletin. No statement is to be construed as violating any copyright or patent. They are intended only as a source of information.

1001N Applicable Models: T-SS-1001N, T-CS-1001N-SS
2 PIECE • FULL PORT • THREADED CONNECTION • 1000 WOG

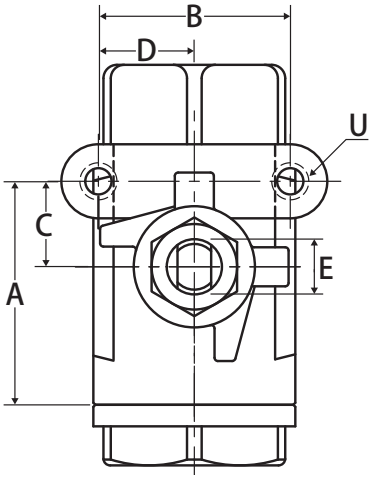

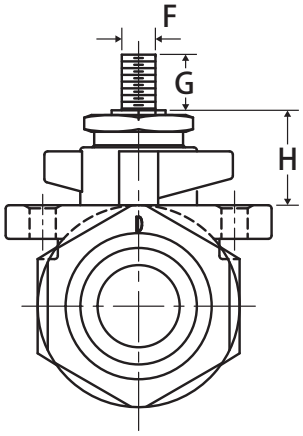

SIZE	A	B	C	D	E	F	G	H	U
1/4”	1.21	1.13	0.50	0.56	0.31	0.20	0.33	0.47	10# - 24UNC
3/8”	1.21	1.13	0.50	0.56	0.31	0.20	0.33	0.47	10# - 24UNC
1/2”	1.31	1.38	0.50	0.69	0.31	0.20	0.39	0.55	10# - 24UNC
3/4”	1.83	1.38	0.87	0.69	0.44	0.28	0.60	0.69	10# - 24UNC
1”	1.99	1.50	0.87	0.75	0.44	0.28	0.60	0.67	1/4” - 20UNC
1-1/4”	2.19	1.50	0.93	0.75	0.57	0.35	0.71	0.77	1/4” - 20UNC
1-1/2”	2.39	1.50	0.93	0.75	0.57	0.35	0.67	0.77	1/4” - 20UNC
2”	2.65	1.50	1.00	0.75	0.57	0.35	0.71	0.83	1/4” - 20UNC

2000N Applicable Models: T-SS-2000N, T-CS-2000N-SS
2 PIECE • FULL PORT • THREADED CONNECTION • 2000 WOG

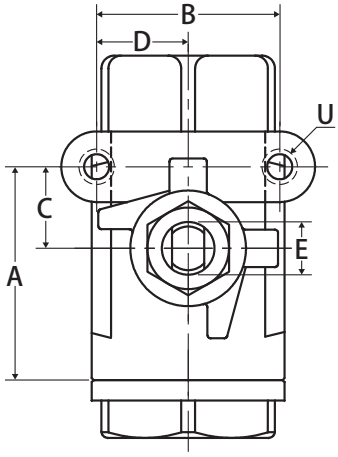

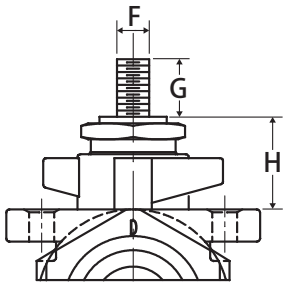

SIZE	A	B	C	D	E	F	G	H	U
1/4”	1.25	1.12	0.50	0.56	0.31	0.20	0.33	0.51	10# - 24UNC
3/8”	1.25	1.12	0.50	0.56	0.31	0.20	0.33	0.51	10# - 24UNC
1/2”	1.31	1.12	0.50	0.56	0.31	0.20	0.39	0.54	10# - 24UNC
3/4”	1.82	1.38	0.87	0.69	0.44	0.28	0.60	0.71	10# - 24UNC
1”	1.93	1.38	0.87	0.69	0.44	0.28	0.60	0.69	10# - 24UNC
1-1/4”	2.08	1.50	0.93	0.57	0.75	0.35	0.71	0.74	1/4” - 20UNC
1-1/2”	2.25	1.50	0.93	0.57	0.75	0.35	0.71	0.75	1/4” - 20UNC
2”	2.46	1.50	0.93	0.57	0.75	0.35	0.67	0.76	1/4” - 20UNC

© 2025 JOMAR VALVE | P: 586.268.1220 | F: 586.979.8615 | JOMARVALVE.COM

1000N-4B Applicable Models: T-SS-1000N-4B, S-SS-1000N-4B, T-CS-1000N-SS-4B, S-CS-1000N-SS-4B

3 PIECE 4 BOLT • SWING OUT BODY • FULL PORT • 1000 WOG

THREADED OR SOCKET WELD CONNECTION

FIGURE 1

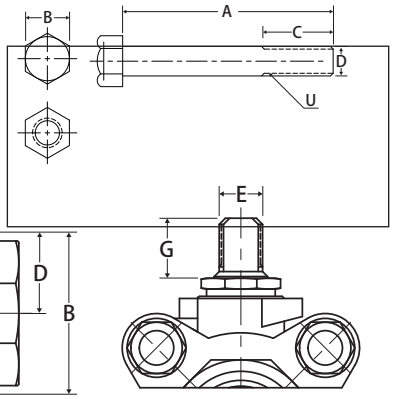

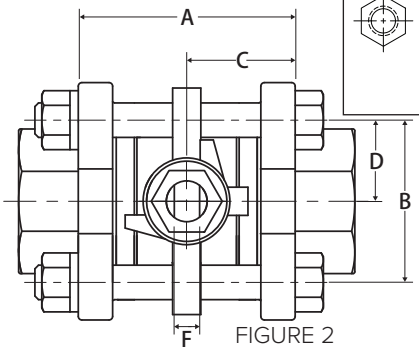

FIGURE 2

FIGURE 1 DIMENSIONS							
SIZE	A ±2	B MAX	B MIN	C ±4	D MAX	D MIN	U
1/4" - 3/8"	2.00	0.44	0.43	0.75	0.25	0.24	1/4" - 20 UNC
1/2"	2.00	0.50	0.48	0.87	0.31	0.30	5/16" - 18 UNC
3/4"	2.37	0.50	0.48	0.87	0.31	0.30	5/16" - 18 UNC
1"	2.83	0.56	0.54	0.87	0.37	0.36	3/8" - 16 UNC
1-1/4"	3.25	0.56	0.54	1.00	0.37	0.36	3/8" - 16 UNC
1-1/2"	3.74	0.63	0.60	1.26	0.44	0.43	7/16" - 14 UNC
2"	4.37	0.75	0.73	1.34	0.50	0.49	1/2" - 13 UNC
2-1/2"	5.51	0.75	0.73	1.26	0.50	0.49	1/2" - 13 UNC
3"	6.25	0.93	0.91	1.18	0.62	0.61	5/8" - 11 UNC

FIGURE 2 DIMENSIONS							
SIZE	A	B	C	D	E	F	G
1/4"	1.46	1.11	0.73	0.56	0.31	0.20	0.33
3/8"	1.46	0.43	0.73	0.56	0.31	0.20	0.33
1/2"	1.64	1.28	0.82	0.64	0.31	0.20	0.39
3/4"	1.85	1.50	0.93	0.75	0.44	0.28	0.60
1"	2.33	1.84	1.17	0.92	0.44	0.28	0.60
1-1/4"	2.69	2.12	1.34	1.06	0.57	0.35	0.71
1-1/2"	3.08	2.48	1.54	1.24	0.57	0.35	0.67
2"	3.70	2.99	1.85	1.50	0.57	0.35	0.63
2-1/2"	4.57	3.70	2.28	1.85	0.64	0.39	0.91
3"	5.20	4.40	2.60	2.20	0.64	0.39	0.91
4"	6.02	3.78	3.01	1.89	0.91	0.55	0.96

2001N-4B Applicable Models: T-SS-2001N-4B, S-SS-2001N-4B, T-CS-2001N-SS-4B, S-CS-2001N-SS-4B

3 PIECE 4 BOLT ENCLOSED • STANDARD PORT • 2000 WOG

THREADED OR SOCKET WELD CONNECTION

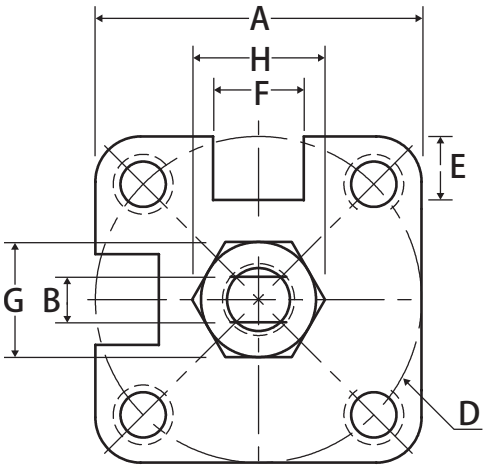

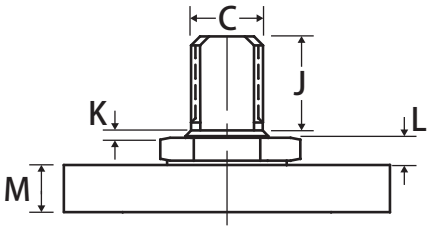

SIZE	A	B	C	D	E	F	G		H		J	K	L	M
							SS	CS	SS	CS				
1/2”	1.42	0.20	0.31	1.42	0.28	0.39	0.55	0.55	0.64	0.64	0.41	0.01	0.09	0.20
3/4”	1.42	0.20	0.31	1.42	0.28	0.39	0.55	0.55	0.64	0.64	0.41	0.01	0.09	0.22
1”	1.65	0.28	0.44	1.65	0.31	0.51	0.75	0.75	0.86	0.86	0.60	0.02	0.13	0.23
1-1/4”	1.65	0.31	0.50	1.65	0.31	0.51	0.75	0.75	0.86	0.86	0.63	0.03	0.22	0.23
1-1/2”	1.97	0.39	0.62	1.97	0.35	0.79	0.87	0.91	1.00	1.01	0.69	0.03	0.24	0.27
2”	1.97	0.39	0.62	1.97	0.35	0.79	0.87	0.91	1.00	1.01	0.69	0.05	0.24	0.28

2002N-DUE Applicable Models: T-SS-2002N-DUE, S-SS-2002N-DUE, T-CS-2002N-SS-DUE, S-CS-2002N-SS-DUE

5 PIECE • FULL PORT • DOUBLE UNION END • 3000 WOG

THREADED OR SOCKET WELD CONNECTION

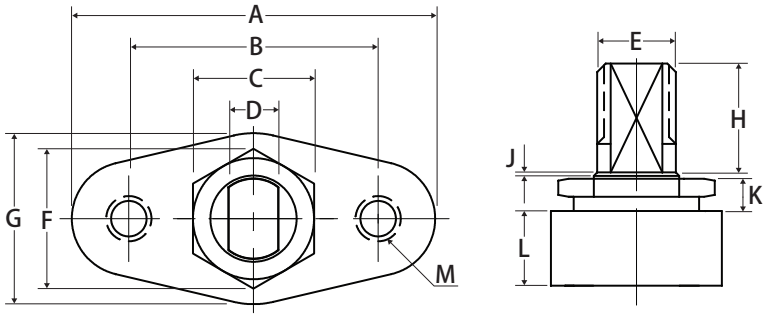

SIZE	A	B	C		D	E	F		G	H	J	K	L	M
			SS	CS			SS	CS						
1/4"	1.65	1.12	0.55	0.55	0.20	0.31	0.64	0.64	0.83	0.41	0.02	0.19	0.28	1/4" - 20UNC
3/8"	1.65	1.12	0.55	0.55	0.20	0.31	0.64	0.64	0.83	0.41	0.02	0.19	0.28	1/4" - 20UNC
1/2"	1.65	1.12	0.55	0.55	0.20	0.31	0.64	0.64	0.83	0.41	0.02	0.19	0.28	1/4" - 20UNC
3/4"	2.01	1.38	0.75	0.75	0.28	0.44	0.86	0.86	0.94	0.60	0.02	0.20	0.41	1/4" - 20UNC
1"	2.01	1.38	0.75	0.75	0.28	0.44	0.86	0.86	0.87	0.60	0.02	0.20	0.43	1/4" - 20UNC
1-1/4"	2.80	2.00	0.91	0.87	0.35	0.57	1.05	1.00	1.18	0.71	0.00	0.21	0.43	1/4" - 20UNC
1-1/2"	2.80	2.00	0.91	0.87	0.35	0.57	1.05	1.00	1.18	0.67	0.02	0.21	0.43	1/4" - 20UNC
2"	2.80	2.00	1.02	1.00	0.35	0.57	1.18	1.15	1.18	0.71	0.02	0.27	0.43	1/4" - 20UNC

© 2025 JOMAR VALVE | P: 586.268.1220 | F: 586.979.8615 | JOMARVALVE.COM

FL-CS/SS-150 Applicable Models: FL-CS-100-150, FL-SS-100-150
2 PIECE • FULL PORT • FLANGED CONNECTION

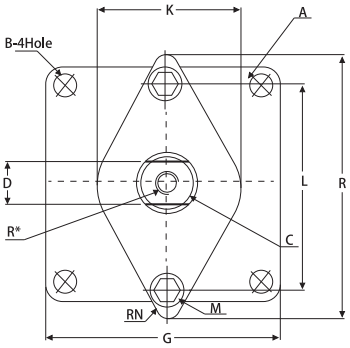

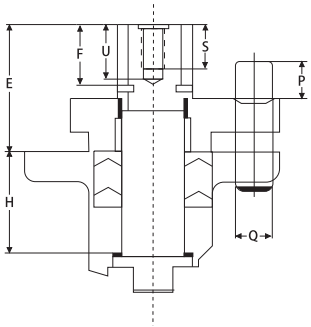

DIMENSIONS																		
SIZE	A	B-4HOLE	C	D	E	F	G	H	K	L	M	N	P	Q	R	R*	S	U	ISO 5211
1/2"	1.97	M6X1	0.47	0.31	0.64	0.19	2.00	1.34	1.10	1.50	0.39	0.25	0.24	1/4" - 20	2.00	M5X0.8	0.39	0.47	F05
3/4"	1.97	M6X1	0.47	0.31	0.76	0.30	2.00	1.52	1.10	1.50	0.39	0.25	0.24	1/4" - 20	2.00	M5X0.8	0.39	0.47	F05
1"	2.76	M8X1.25	0.59	0.39	1.07	0.52	2.68	1.80	1.35	1.83	0.47	0.30	0.30	5/16" - 18	2.44	M6X1	0.39	0.47	F07
1-1/2"	2.76	M8X1.25	0.75	0.55	1.31	0.68	2.97	2.40	1.71	2.22	0.55	0.38	0.36	3/8" - 16	2.97	M8X1.25	0.47	0.59	F07
2"	2.76	M8X1.25	0.75	0.55	1.31	0.68	2.97	2.72	1.71	2.22	0.55	0.38	0.36	3/8" - 16	2.97	M8X1.25	0.47	0.59	F07
2-1/2"	2.76	M8X1.25	0.75	0.55	1.31	0.68	2.68	3.15	1.71	2.22	0.55	0.46	0.36	3/8" - 16	3.14	M8X1.25	0.47	0.59	F07
3"	4.02	M10X1.5	0.94	0.63	1.75	0.96	3.75	3.79	2.09	2.83	0.71	0.46	0.48	1/2" - 12	3.75	M8X1.25	0.59	0.75	F10
4"	4.02	M10X1.5	1.18	0.79	1.83	0.96	4.33	4.72	2.31	3.08	0.94	0.63	0.63	5/8" - 11	4.33	M8X1.25	0.59	0.75	F10
5"	4.02	M10X1.5	1.18	0.79	1.86	0.96	3.78	5.91	2.31	3.08	0.94	0.63	0.63	5/8" - 11	4.33	M8X1.25	0.59	0.75	F10
6"	4.92	M12X1.75	1.50	1.02	2.48	0.28	4.53	7.24	2.82	3.94	0.94	0.57	0.63	5/8" - 11	5.08	-	-	-	F12
8"	5.51	M16X2	1.89	1.26	3.01	1.66	5.41	9.35	3.35	4.72	0.94	0.61	0.63	5/8" - 11	5.94	-	-	-	F14
10"	6.50	M20X2.5	2.28	1.57	3.35	1.77	6.50	11.69	3.94	5.51	1.18	0.77	0.79	M20X2.5	7.05	-	-	-	F16
12"	6.50	M20X2.5	2.76	1.77	3.83	2.13	6.50	13.68	4.68	5.91	1.18	0.77	0.79	M20X2.5	7.44	-	-	-	F16

FL-CS/SS-300 Applicable Models: FL-CS-100-300, FL-SS-100-300
2 PIECE • FULL PORT • FLANGED CONNECTION

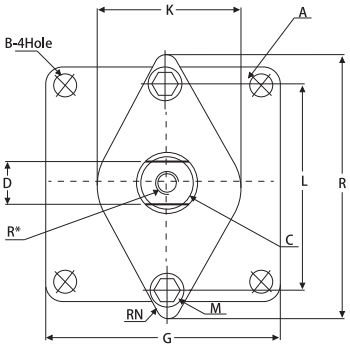

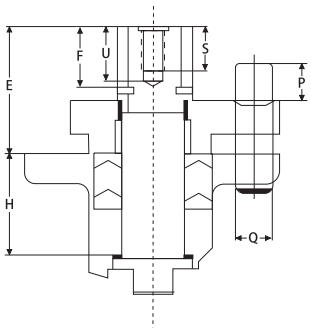

DIMENSIONS														
SIZE	A	B-4HOLE	C	D	E	F	G	H	K	L	M	N	P	Q	ISO 5211
1/2"	1.97	M6X1	0.47	0.31	0.76	0.30	1.89	1.52	1.10	1.50	0.39	0.25	0.24	1/4" - 20	F05
3/4"	1.97	M6X1	0.47	0.31	0.76	0.30	1.89	1.52	1.10	1.50	0.39	0.25	0.24	1/4" - 20	F05
1"	2.76	M6X1	0.59	0.39	1.07	0.52	1.97	1.79	1.35	1.83	0.47	0.30	0.30	5/16" - 18	F05
1-1/2"	2.76	M8X1.25	0.75	0.55	1.31	0.68	2.68	2.40	1.71	2.22	0.55	0.38	0.36	3/8" - 16	F07
2"	2.76	M8X1.25	0.75	0.55	1.31	0.68	2.68	2.92	1.71	2.22	0.55	0.38	0.36	3/8" - 16	F07
2-1/2"	2.76	M10X1.5	0.75	0.63	0.17	0.96	3.78	3.41	2.09	2.83	0.71	0.46	0.48	1/2" - 12	F10
3"	4.02	M10X1.5	0.94	0.63	1.75	0.96	3.70	3.79	2.09	2.83	0.71	0.46	0.48	1/2" - 12	F10
4"	4.02	M10X1.5	1.18	0.79	1.81	0.96	3.62	4.06	2.31	3.08	0.94	0.63	0.63	5/8" - 11	F10
5"	4.02	M10X1.5	1.18	0.79	1.82	0.96	3.62	5.00	2.31	3.08	0.94	0.63	0.63	5/8" - 11	F10
6"	4.92	M12X1.75	1.50	1.02	2.48	0.28	4.53	7.17	2.82	3.94	0.94	0.57	0.57	5/8" - 11	F12
8"	5.51	M16X2	1.89	1.26	3.01	1.66	5.41	9.19	3.35	4.72	0.94	0.61	0.61	5/8" - 11	F14

JV SERIES SPRING RETURN OUTPUT TORQUE (IN-LB)

AS SIZE	SPRING NO	40 PSI AIR START 0	40 PSI AIR END 90	60 PSI AIR START 0	60 PSI AIR END 90	80 PSI AIR START 0	80 PSI AIR END 90	100 PSI AIR START 0	100 PSI AIR END 90	SPRING TORQUE SPRING START 90	SPRING TORQUE SPRING END 0
JV-50	6	51	33	96	78	141	123	186	168	57	39
	7	45	23	90	68	135	113	180	158	67	45
	8			83	58	128	103	173	148	77	52
	9			77	49	122	94	167	139	86	58
	10					116	84	161	129	96	64
	11					109	75	154	120	105	71
	12							148	110	115	77
JV-60	6	105	67	196	158	287	249	379	341	116	78
	7	91	47	182	138	273	229	365	321	136	92
	8			169	119	260	210	352	302	155	105
	9			156	99	247	190	339	282	175	118
	10					234	171	326	263	194	131
	11					221	152	313	244	213	144
	12							300	224	233	157
JV-70	6	162	103	314	245	445	386	587	528	181	122
	7	142	73	294	215	425	356	567	498	211	142
	8			274	185	405	326	547	468	241	162
	9			253	155	384	296	526	438	271	183
	10					364	266	506	408	301	203
	11					344	236	486	378	331	223
	12							465	347	362	244
JV-80	6	237	151	446	360	654	568	862	776	265	179
	7	207	106	416	315	624	523	832	731	310	209
	8			386	271	594	479	802	687	354	239
	9			357	227	565	435	773	643	398	268
	10					535	391	743	599	442	298
	11					505	347	713	555	486	328
	12							683	510	531	358
JV-90	6	334	212	627	505	919	797	1212	1090	373	251
	7	292	150	585	443	877	735	1170	1028	435	293
	8			543	381	835	673	1128	966	497	335
	9			501	319	793	611	1086	904	559	377
	10					751	549	1044	842	621	419
	11					709	486	1002	779	684	461
	12							960	717	746	503
JV-100	6	448	285	840	677	1232	1069	1624	1461	500	337
	7	392	202	784	594	1176	986	1568	1378	583	393
	8			728	510	1120	902	1512	1294	667	449
	9			671	427	1063	819	1455	1211	750	506
	10			615	344	1007	736	1399	1128	833	562
	11					951	652	1343	1044	917	618
	12							1287	961	1000	674
JV-120	6	448	285	1446	1165	2122	1841	2797	2516	861	580
	7	674	347	1349	1022	2025	1698	2700	2373	1004	677
	8			1252	878	1928	1554	2603	2229	1148	774
	9			1156	735	1832	1411	2507	2086	1291	870
	10					1735	1267	2410	1942	1435	967
	11					1638	1124	2313	1799	1578	1064
	12							2216	1656	1721	1161

Torque in lbs.

JV SERIES SPRING RETURN OUTPUT TORQUE (IN-LB)

AS SIZE	SPRING NO	40 PSI AIR START 0	40 PSI AIR END 90	60 PSI AIR START 0	60 PSI AIR END 90	80 PSI AIR START 0	80 PSI AIR END 90	100 PSI AIR START 0	100 PSI AIR END 90	SPRING TORQUE SPRING START 90	SPRING TORQUE SPRING END 0
JV-140	6	967	615	1814	1462	2661	2309	3508	3156	1080	728
	7	846	435	1693	1282	2540	2129	3387	2976	1260	849
	8			1571	1102	2418	1949	3265	2796	1440	971
	9			1450	922	2297	1769	3144	2616	1620	1092
	10					2176	1589	3023	2436	1800	1213
	11					2054	1410	2901	2257	1979	1335
	12							2780	2077	2159	1456
JV-160	6	1579	1004	2962	2387	4345	3770	5729	5154	1763	1188
	7	1380	710	2763	2093	4146	3476	5530	4860	2057	1387
	8			2565	1800	3948	3183	5332	4567	2350	1585
	9			2367	1506	3750	2889	5134	4273	2644	1783
	10					3552	2595	4936	3979	2938	1981
	11					3354	2301	4738	3685	3232	2179
	12							4540	3391	3526	2377
JV-190	6	2597	1652	4872	3927	7148	6203	9424	8479	2900	1955
	7	2271	1169	4546	3444	6822	5720	9098	7996	3383	2281
	8			4220	2960	6496	5236	8772	7512	3867	2607
	9			3894	2477	6170	4753	8446	7029	4350	2933
	10					5844	4269	8120	6545	4834	3259
	11					5518	3786	7794	6062	5317	3585
	12							7469	5579	5800	3910
JV-200	6	3262	2075	6122	4935	8981	7794	11841	10654	3644	2457
	7	2853	1468	5713	4328	8572	7187	11432	10047	4251	2866
	8			5303	3720	8162	6579	11022	9439	4859	3276
	9			4894	3113	7753	5972	10613	8832	5466	3685
	10					7343	5365	10203	8225	6073	4095
	11					6934	4757	9794	7617	6681	4504
	12							9385	7010	7288	4913
JV-240	6	5780	3676	10845	8741	15911	13807	20977	18873	6456	4352
	7	5054	2601	10119	7666	15185	12732	20251	17798	7531	5078
	8			9394	6590	14460	11656	19526	16722	8607	5803
	9			8669	5514	13735	10580	18801	15646	9683	6528
	10					13009	9504	18075	14570	10759	7254
	11					12284	8428	17350	13494	11835	7979
	12							16625	12418	12911	8704
JV-270	6	7250	4611	13605	10966	19959	17320	26314	23675	8098	5459
	7	6340	3262	12695	9617	19049	15971	25404	22326	9447	6369
	8			11785	8267	18139	14621	24494	20976	10797	7279
	9			10875	6917	17229	13271	23584	19626	12147	8189
	10					16319	11922	22674	18277	13496	9099
	11					15409	10572	21764	16927	14846	10009
	12							20854	15577	16196	10919
JV-300	6	10172	6470	19087	15385	28003	24301	36919	33217	11362	7660
	7	8896	4577	17811	13492	26727	22408	35643	31324	13255	8936
	8			16534	11598	25450	20514	34366	29430	15149	10213
	9			15257	9704	24173	18620	33089	27536	17043	11490
	10					22897	16727	31813	25643	18936	12766
	11					21620	14833	30536	23749	20830	14043
	12							29259	21856	22723	15320

© 2025 JOMAR VALVE | P: 586.268.1220 | F: 586.979.8615 | JOMARVALVE.COM

SPRING RETURN OUTPUT TORQUE (IN-LB) @ 80PSI W/ 11 SPRINGS (STANDARD)

MODEL	SQ	ISO	AIR START	SPRING END
JV-50-SR	0.43	F03/05	109	71
JV-60-SR	0.55	F05/07	221	144
JV-70-SR	0.55	F05/07	344	223
JV-80-SR	0.67	F05/07	505	328
JV-90-SR	0.67	F05/07/10	709	461
JV-100-SR	0.87	F05/07/10	951	618
JV-120-SR	0.87	F07/10	1638	1064
JV-140-SR	1.06	F07/F10/12	2054	1335
JV-160-SR	1.06	F10/12	3354	2179
JV-190-SR	1.42	F10/14	5518	3585
JV-200-SR	1.42	F10/14	6934	4504
JV-240-SR	1.81	F16	12284	7979
JV-270-SR	1.81	F16	15409	10009
JV-300-SR	1.81	F16	21620	14043

BUTTERFLY VALVES MAX BREAK TORQUE

SIZE	SQ	ISO	EPDM & BUNA		PTFE		VITON®	
			WET	DRY	WET	DRY	WET	DRY
2"	0.35	F05	176	283	353	565	198	318
2-1/2"	0.35	F05	201	381	401	763	226	429
3"	0.35	F05	269	511	537	1022	302	575
4"	0.43	F07	464	850	928	1699	522	956
5"	0.55	F07	800	1500	1600	2900	900	1600
6"	0.55	F07	1196	2033	2392	4066	1345	2287
8"	0.67	F10	2238	3850	4476	7700	2518	4331
10"	0.86	F10	3768	6407	7537	12813	4239	7207
12"	0.87	F10	5721	9326	11443	18652	6437	10492
14"	0.87	F10	6638	10302	13276	20605	7468	11590
16"	1.06	F14	8985	13882	17971	27763	10108	15617
18"	1.06	F14	12012	18910	24024	37810	13514	21270
20"	1.42	F14	15199	24513	30397	49026	17098	27577
24"	1.42	F16	24439	39414	48877	78828	27494	44341
30"	1.77	F25	28322	42484	42484	63725	31115	46732
36"	2.17	F25	40625	60937	60937	91410	44687	67035

JV SERIES DOUBLE ACTING OUTPUT TORQUE

MODEL	SQ	ISO	SUPPLY PRESSURE - PSI 40	60	80	100
JV-50-DA	0.43	F03/05	90	135	180	225
JV-60-DA	0.55	F05/07	183	274	365	457
JV-70-DA	0.55	F05/07	284	426	567	709
JV-80-DA	0.67	F05/07	416	625	833	1041
JV-90-DA	0.67	F05/07/10	585	878	1170	1483
JV-100-DA	0.87	F05/07/10	785	1177	1589	1961
JV-120-DA	0.87	F07/10	1351	2026	2702	3377
JV-140-DA	1.06	F07/10/12	1695	2542	3389	4236
JV-160-DA	1.06	F10/12	2767	4150	5533	6917
JV-190-DA	1.42	F10/14	4552	6827	9103	11379
JV-200-DA	1.42	F10/14	5719	8579	11438	14298
JV-240-DA	1.81	F16	1132	15197	20263	25329
JV-270-DA	1.81	F16	12709	19064	25418	31773
JV-300-DA	1.81	F16	17832	26747	35663	44579
JV-350-DA	1.81	F16	27282	40923	54563	68204

BUTTERFLY VALVE CVS

FLOW IN GPM @ 1PSID @ VARIOUS DISC ANGLES

SIZE	10°	20°	30°	40°	50°	60°	70°	80°	FULL 90° OPEN
2”	0.1	5	12	24	45	64	90	125	135
2.5”	0.2	8	20	37	65	98	144	204	220
3”	0.3	12	22	39	70	116	183	275	302
4”	0.5	17	36	78	139	230	364	546	600
5”	0.8	29	61	133	237	392	620	930	1022
6”	2	45	95	205	366	605	958	1437	1579
8”	3	89	188	408	727	1202	1903	2854	3136
10”	4	151	320	694	1237	2047	3240	4859	5340
12”	5	234	495	1072	1911	3162	5005	7505	8250
14”	6	338	715	1549	2761	4568	7230	10844	11917
16”	8	464	983	2130	3797	6282	9942	14913	1638
18”	11	615	1302	2822	5028	8320	13168	19752	21705
20”	14	791	1674	3628	6465	10698	16931	25396	27908
24”	22	1222	2587	5605	9989	16528	26157	39236	43116

AE ELECTRIC SERIES

MODEL	SQ	ISO	TORQUE
AE-180	.43	F03/05	180
AE-350	.55	F03/05/07	350
AE-700	.67	F05/07	700
AE-880	.67	F07	880
AE-1400	.87	F07/10	1400
AE-2100	.87	F07/10	2125
AE-3100	1.06	F10/12	3098
AE-4400	1.06	F10/12	4425
AE-7000	1.42	F12/14	7080
AE-9700	1.54	F14	9735

Spring Mounting Form for Spring Return Actuators

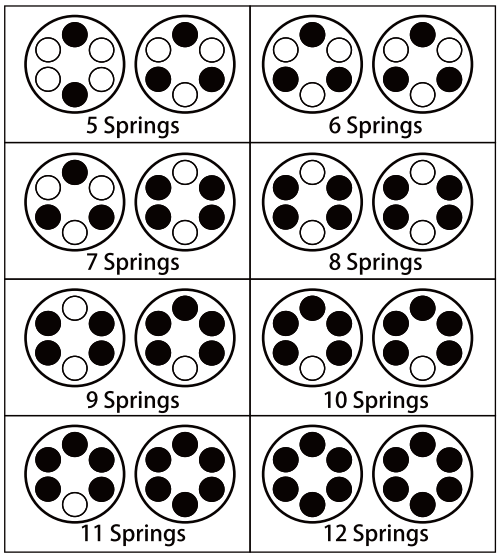

T-100 SERIES

SIZE	TORQUE	BRACKET USED	ISO	SQ
1/4"	23	A1B-A1C11	F03/05	.43
3/8"	23	A1B-A1C11	F03/05	.43
1/2"	35	A1B-A1C11	F03/05	.43
3/4"	62	A2B-A2C11	F03/04/05	.43
1"	89	A3B-A3C11	F05	.43
1-1/4"	132	A3B-A3C11	F05	.43
1-1/2"	177	A4B-A4C14	F05/07	.55
2"	222	A4B-A4C14	F05/07	.55
2-1/2"	354	FABRICATED		
3"	442	FABRICATED		
4"	620	FABRICATED		

T-1001N

SIZE	TORQUE	BRACKET
1/4"	40	FABRICATED
3/8"	40	FABRICATED
1/2"	40	FABRICATED
3/4"	60	FABRICATED
1"	70	FABRICATED
1-1/4"	110	FABRICATED
1-1/2"	170	FABRICATED
2"	250	FABRICATED

CLASS 150 FLANGE

SIZE	TORQUE	BRACKET
1/2"	48	FABRICATED
3/4"	90	FABRICATED
1"	148	FABRICATED
1-1/2"	270	FABRICATED
2"	395	FABRICATED
2-1/2"	609	FABRICATED
3"	913	FABRICATED
4"	1443	FABRICATED
5"	2687	FABRICATED
6"	4870	FABRICATED
8"	8522	FABRICATED
10"	13276	FABRICATED
12"	24780	FABRICATED

T/S-1000N-4B

SIZE	TORQUE	BRACKET
1/4"	60	FABRICATED
3/8"	60	FABRICATED
1/2"	80	FABRICATED
3/4"	150	FABRICATED
1"	250	FABRICATED
1-1/4"	320	FABRICATED
1-1/2"	400	FABRICATED
2"	480	FABRICATED
2-1/2"	600	FABRICATED
3"	850	FABRICATED
4"	1200	FABRICATED

T-2000N-SS

SIZE	TORQUE	BRACKET
1/4"	35	FABRICATED
3/8"	35	FABRICATED
1/2"	65	FABRICATED
3/4"	100	FABRICATED
1"	120	FABRICATED
1-1/4"	210	FABRICATED
1-1/2"	300	FABRICATED
2"	400	FABRICATED

T/S-2001N-4B

SIZE	TORQUE	BRACKET
1/2"	85	FABRICATED
3/4"	150	FABRICATED
1"	180	FABRICATED
1-1/4"	210	FABRICATED
1-1/2"	320	FABRICATED
2"	440	FABRICATED

CLASS 300 FLANGE

SIZE	TORQUE	BRACKET
2"	1068	FABRICATED
3"	1752	FABRICATED
4"	3216	FABRICATED
6"	6900	FABRICATED
8"	16620	FABRICATED
10"	23040	FABRICATED

A1001

SIZE	TORQUE	ISO	SQ
1/4"	53	F03/04	0.35
3/8"	53	F03/04	0.35
1/2"	61	F03/04	0.35
3/4"	79	F03/04	0.35
1"	97	F04/05	0.43
1-1/4"	123	F04/05	0.43
1-1/2"	256	F05	0.55
2"	327	F05	0.55

A2020D

SIZE	TORQUE	ISO	SQ
1/2"	117	F03/04	0.35
3/4"	138	F03/04	0.35
1"	159	F04/05	0.43
1-1/4"	200	F04/05	0.43
1-1/2"	283	F05/07	0.55
2"	563	F05/07	0.55
2-1/2"	903	F07/10	0.67
3"	1018	F07/10	0.67
4"	1252	F10	0.87

T/S-2002N-DUE

SIZE	TORQUE	BRACKET
1/4"	35	FABRICATED
3/8"	35	FABRICATED
1/2"	65	FABRICATED
3/4"	100	FABRICATED
1"	120	FABRICATED
1-1/4"	210	FABRICATED
1-1/2"	300	FABRICATED
2"	400	FABRICATED

A101

SIZE	TORQUE	ISO	SQ
1/2"	16	F03	0.35
3/4"	23	F03	0.35
1"	36	F05	0.43
1-1/4"	73	F05	0.43
1-1/2"	76	F05	0.43
2"	130	F05	0.43

A1000

SIZE	TORQUE	ISO	SQ
1/2"	40	F03/04	0.35
3/4"	60	F03/04	0.35
1"	70	F04/05	0.43
1-1/4"	110	F04/05	0.43
1-1/2"	170	F05/07	0.55
2"	250	F05/07	0.55
2-1/2"	650	F07/10	0.67
3"	850	F07/10	0.67
4"	950	F10/12	0.87

A751L/T

SIZE	TORQUE	ISO	SQ
1/4"	54	F03	0.35
3/8"	54	F03	0.35
1/2"	54	F03	0.35
3/4"	54	F03	0.35
1"	151	F05	0.43
1-1/4"	151	F05	0.43
1-1/2"	151	F05	0.43
2"	275	F07	0.55

A850L/T

SIZE	TORQUE	ISO	SQ
1/4"	105	F03/F04	0.35
3/8"	105	F03/F04	0.35
1/2"	138	F03/F04	0.35
3/4"	184	F04/F05	0.43
1"	323	F04/F05	0.43
1-1/4"	461	F05/F07	0.55
1-1/2"	633	F05/F07	0.55
2"	1037	F07/F10	0.67

© 2025 JOMAR VALVE | P: 586.268.1220 | F: 586.979.8615 | JOMARVALVE.COM

ISO MOUNTING PATTERNS

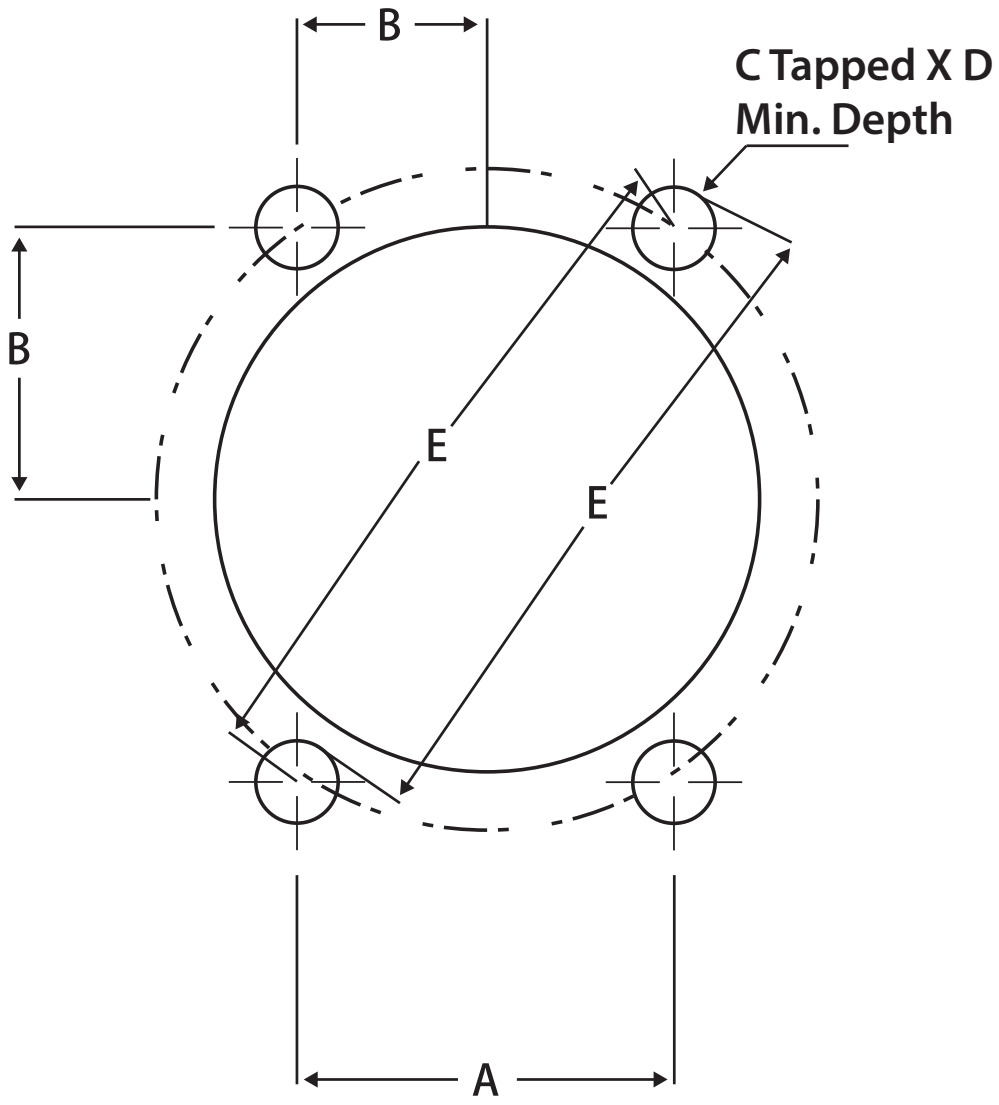

ISO TYPE	DIMENSIONS					
	A	B	C	D MIN	E DIA	NUMBER OF HOLES
F03	1.002	.501	10-24 / M5	.35	1.414	4
F04	1.170	.585	10-24 / M5	.35	1.656	4
F05	1.392	.696	1/4" / M6	.35	1.97	4
F07	1.948	.974	5/16" / M8	.47	2.756	4
F10	2.840	1.420	3/8" / M10	.59	4.02	4
F12	3.480	1.740	1/2" / M12	.71	4.92	4
F14	3.898	1.949	5/8" / M14	.94	5.51	4
F16	4.593	2.296	3/4" / M16	1.18	6.50	4
F25	7.070	3.535	5/8" / M14	.94	10.0	8
F30	8.295	4.147	3/4" / M16	1.18	11.73	8
F35	9.909	4.955	M30	1.77	14.01	8
F40	11.301	5.650	M36	2.13	15.98	8
F48	13.444	6.722	M36	2.13	19.01	12
F60	16.784	8.392	M36	2.13	23.74	20

ACTUATION QUESTIONNAIRE

VALVE SELECTION

MEDIA TYPE IN VALVE:
☐ WET ☐ DRY

MODEL _____
VALVE SIZE _____
QUANTITY _____
MAX MEDIA PRESSURE _____
MAX MEDIA TEMPERATURE _____
FREQUENCY OF OPERATION _____

VALVE TYPE

BALL MATERIAL:
- ☐ BRASS
- ☐ CARBON STEEL
- ☐ STAINLESS STEEL
- ☐ PVC

BUTTERFLY SEAT MATERIAL:
- ☐ EPDM ☐ VITON®
- ☐ BUNA ☐ PTFE

CONNECTION TYPE:
- ☐ THREADED
- ☐ SOLDER
- ☐ FLANGED
- ☐ SOCKET WELD
  - ☐ CLASS 150
  - ☐ CLASS 300

ACTUATOR SELECTION

☐ **ELECTRIC**
PROCEED TO SECTION A BELOW

☐ **PNEUMATIC**
PROCEED TO SECTION B BELOW

SECTION A: ELECTRIC

VOLTAGE _____

ACTUATOR TYPE:
- ☐ DOUBLE ACTING (FAIL IN PLACE)
- ☐ FAIL-SAFE
- ☐ FAIL OPEN
- ☐ FAIL CLOSED
- ☐ SPRING RETURN ELECTRIC
- ☐ BATTERY BACKUP ELECTRIC

TIME FOR 90° ROTATION _____

CONTROL TYPE:
- ☐ ON/OFF
- ☐ MODULATING
  - ☐ 4-20MA
  - ☐ 0-10V
  - ☐ 1-5V

ENCLOSURE:
- ☐ NEMA 4
- ☐ NEMA 7
- ☐ OTHER

OPTIONS:
- ☐ AUXILIARY LIMIT SWITCHES
- ☐ BRAKE
- ☐ MANUAL OVERRIDE
- ☐ POSITION TRANSMITTER
- ☐ POTENTIOMTER
- ☐ THERMOSTAT

SECTION B: PNEUMATIC

ACTUATOR TYPE:
- ☐ AIR TO AIR (DOUBLE ACTING)
- ☐ AIR TO SPRING (SPRING RETURN)
- ☐ FAIL OPEN
- ☐ FAIL CLOSED

OPTIONS:
- ☐ SOLENOID VALVE
- ☐ COIL VOLTAGE
  - ☐ 120VAC
  - ☐ 24VAC
  - ☐ 24VDC
  - ☐ 12VDC
- ☐ COIL ENCLOSURE
  - ☐ NEMA 4
  - ☐ NEMA 7
- ☐ SPEED CONTROL MUFFLERS
  - ☐ LIMIT SWITCH
    - ☐ NEMA 4
    - ☐ NEMA 7
- ☐ POSITIONER
  - ☐ ELECTRO-PNEUMATIC (4-20MA)
  - ☐ PNEUMATIC (3-15PSI)

© 2025 JOMAR VALVE | P: 586.268.1220 | F: 586.979.8615 | JOMARVALVE.COM

NOTES

© 2025 JOMAR VALVE
I P: 586.268.1220 I F: 586.979.8615 I JOMARVALVE.COM

Jomar® VALVE

T-100CG T-100SSE T-100NE T-100SSS

©JOMAR VALVE | P: 586.268.1220 | F: 586.979.8615 | JOMARVALVE.COM

LIT-JV-IAC