Manual Balancing Valve

Fixed Orifice • Isolation Ball Valve • Memory Stop • Union • 600 WOG • with Stainless Steel Trim

Terminator B SS

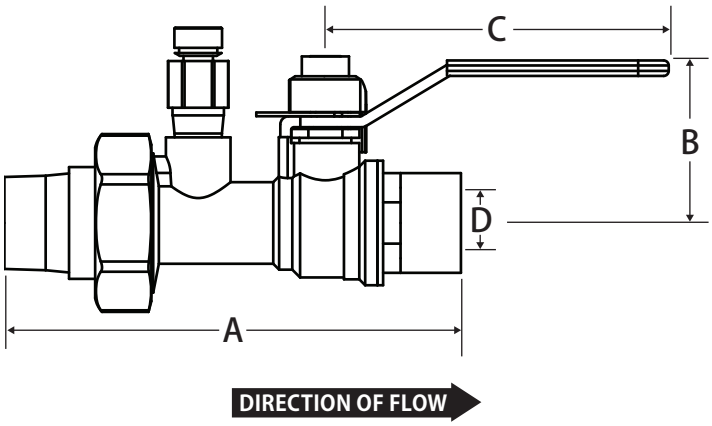

Features

- Patented removable venturi
- +/- 2% Accuracy
- Two pressure / temperature (PT) test ports
- Location tag
- Additional accessory tap
- Triple sealing stem with 2 Viton® o-rings and Teflon® seal
- Blow out proof stem
- 100% leak tested
- Made in Italy
- Leakproof stem - Lifetime warranty
- See end of catalog for pressure drop charts

Pressure and Temperature Rating

- 600 WOG
- 325°F Max

Smart Part Number Ordering Guide

TBSS-BCRM-ABX

TBSS | B | C | RM | AB | X

Valve Size

A	1/2"
B	3/4"
C	1"
D	1-1/4"
E	1-1/2"
F	2"

Body Type

F	FNPT
C	SWT

Tailpiece Size and Type

No Reduction	
F	FNPT
M	MNPT
C	SWT
Single Reduction*	
RF	FNPT
RM	MNPT
RC	SWT
Double Reduction**	
2RF	FNPT
2RM	MNPT
2RC	SWT

*Only available on 3/4" - 2" valves
**Only available on 1" - 2" valves

Optional

Optional Accessories

X	Extended Handle, PT Ports and Accessories
V	Manual Air Vent
AB	Automatic Air Vent w/Ball Valve
B	Ball Valve Air Vent

Material Specifications

Part	Material
Body	Brass - CW617N
End Connection	Brass - CW617N
Ball	316 Stainless Steel
Seat (2)	Virgin PTFE
Stem	316 Stainless Steel
Packing	Virgin PTFE
Stem O-ring (2)	Viton®
Packing Gland	Brass - CW614N
Handle	Steel - Geomet® Plated
Handle Nut	Steel - Geomet® Plated
Metering Plate	Aluminum
Memory Stop	Brass - CW617N
Memory Stop Screw	Steel - Geomet® Plated
Union O-ring	Viton®
Tail Piece	Brass - CW617N
Union Nut	Brass - CW617N
Venturi	Brass - CW614N
Venturi O-ring	Viton®

Dimensions

Size	A*	B	C	D
1/2"	4.56	1.57	2.95	0.59
3/4"	4.88	1.57	2.95	0.59
1"	5.65	1.93	3.74	0.79
1-1/4"	7.00	2.44	4.72	0.98
1-1/2"	7.81	2.64	4.72	1.26
2"	9.19	3.29	5.91	1.58

*Length is for a SWT x MNPT valve, additional dimensions available upon request

WARNING: This product can expose you to chemicals including lead, which is known to the State of California to cause cancer, birth defects or other reproductive harm. For more information go to www.P65Warnings.ca.gov.

© 2022 Jomar Valve • www.jomarvalve.com • P: (586) 268-1220 • F: (586) 979-8315

Pressure Drop Chart

Terminator B (1/2" - 1")

CV of Valves

- #3 Venturi: **0.44**
- #4 Venturi: **1.30**
- #6 Venturi: **2.65**
- #7.5 Venturi: **3.61**
- #9 Venturi: **7.05**
- #12 Venturi: **11.40**

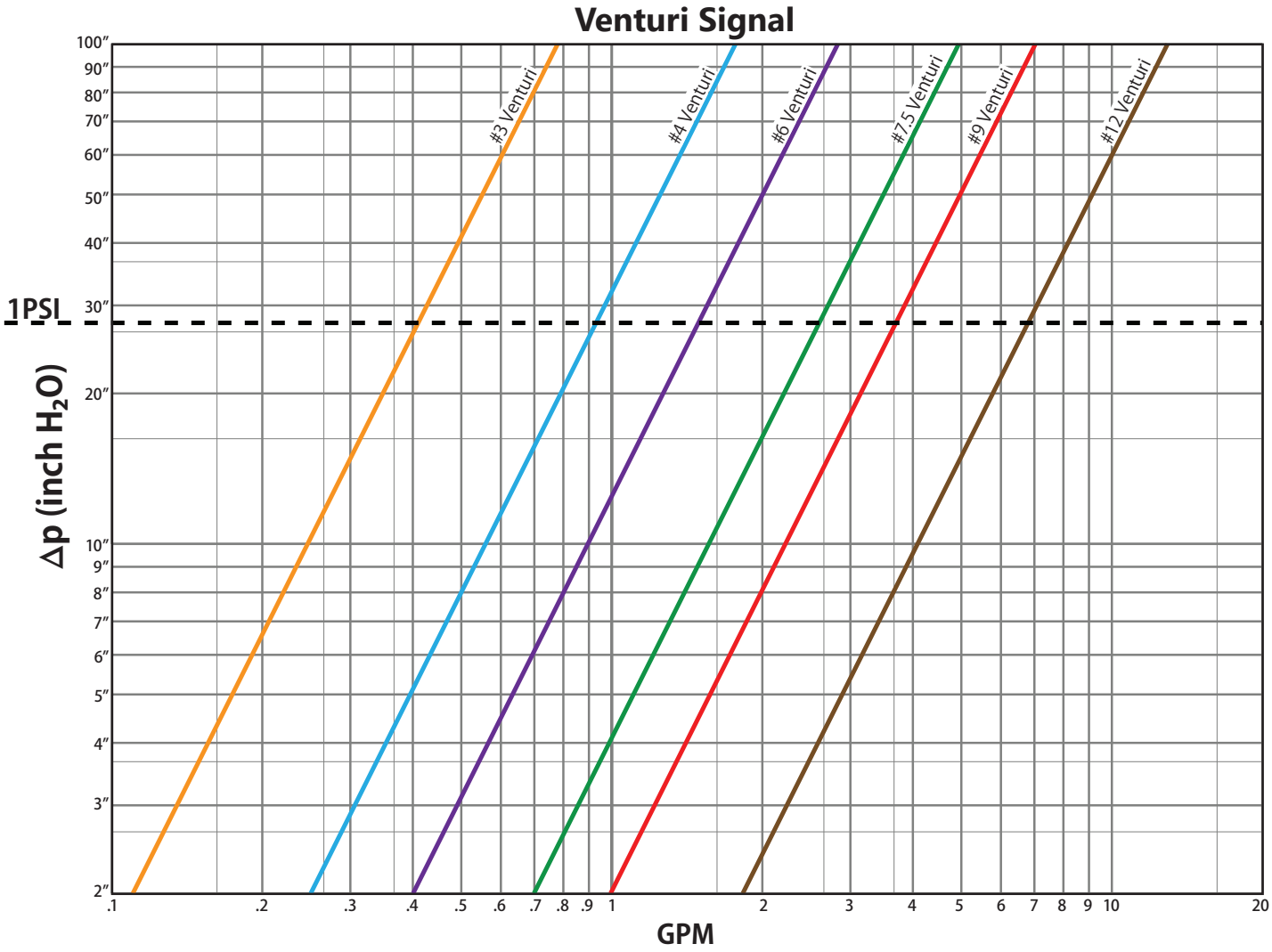

© 2022 Jomar Valve • www.jomarvalve.com • P: (586) 268-1220 • F: (586) 979-8315

Pressure Drop Chart

Terminator B (1-1/4" - 2")

CV of Valves

- 1-1/4" w/ #13 Venturi: **15.0**
- 1-1/4" w/ #19 Venturi: **34.0**
- 1-1/2" w/ #15 Venturi: **20.9**
- 1-1/2" w/ #22 Venturi: **57.0**
- 2" w/ #18 Venturi: **30.8**
- 2" w/ #25 Venturi: **57.0**
- 2" w/ #32 Venturi: **88.0**

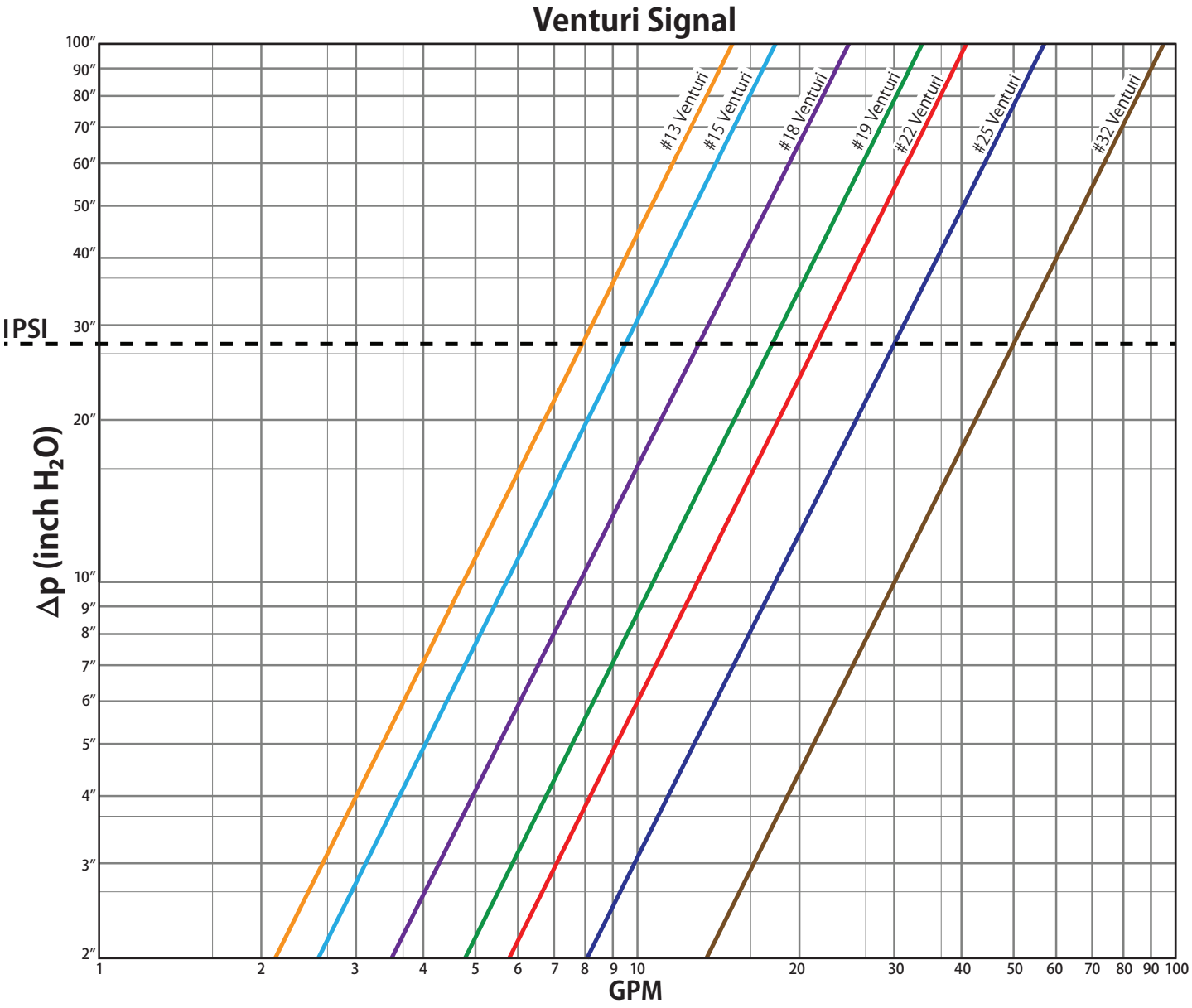

© 2022 Jomar Valve • www.jomarvalve.com • P: (586) 268-1220 • F: (586) 979-8315